Industrial Technology Folio Guidelines

The first page of your folio should be a:

Title Page

Then the second page should be a:

Table of Contents

Then the rest of the folio should be set out in order of the table of contents. Do not include a title page for each section as it is a waste of pages. Use a header for each section and a tab on the side of the first page to help divide the folio.

Design, management & communication

1. Statement of Intent
2. Research including selection and justification of: a) Materials;
   b) Processes;
   c) Technologies;
   d) Resources
3. Development of Ideas: a) Sketching and idea generation;
   b) Prototyping, modelling & testing;
   c) Production & working drawings
4. Evidence of project management: a) Project management;
   b) Record of production
5. Timeline Plan
6. Finance Plan
7. Evidence of OHS & safe working practices
8. Appropriate design and/or design modification: a) Materials;
   b) Components;
   c) Processes
9. Presentation skills & techniques including ICT
10. Ongoing evaluation of the major project: a) Statement of intent;
    b) Research & planning

Production

1. Quality of the product
2. Evidence of a range of skills & degree of difficulty
3. Links between planning and production
4. Use of appropriate materials, components, processes & technologies
5. Evidence of solutions to problems in production

Statement of Intent

Board of Studies Description
Clarifies the intent of the major project by explaining clearly what is to be achieved and why.

This allows the examiner to know what you intend to do. The markers will refer back to this paragraph to see if you have carried out your intentions. Therefore make it simple and to the point, but don't close off research, (i.e. don't say that it is to be made from Radiata Pine. Instead say timber, then research the type later and gain some marks).

Don't forget to say why you are making this project and where it is going to go (the environment that it is to fit into). Even though the example below uses bullet points, a Band 6 Statement of intent should be written using paragraphs.

Check List

- ❑ State what you are going to make
- ❑ Why you are making this product (the motivation)
- ❑ Don't specify exact sizes, types of materials or what is involved in the construction of your project; however you can indicate what the possibilities could be.
- ❑ Include a photo of the environment your project must fit into

For Example:

Statement of Intent

For my major project I wish to construct a wine rack cabinet that will fit on the wall above my fathers bar and compliment the existing furniture

Photo

Motivation
- I know this project will be fully utilized in our home
- It will be a challenging project to design, construct and manage

Use
- to store wine bottles and wine glasses in a neat and organized manner

Possibilities
- Australiana theme
- Traditional construction techniques
- Australian hardwood timbers
- Stainless steel fittings
- Clear finishes to enhance the colour and grain of the timber

Research including selection and justification of: Materials; Processes; Technologies; Resources

Board of Studies Description
Conducts and explains a wide range of relevant research, justifying the selection of appropriate materials, processes, technologies and resources

Research is the foundation of your project. Without sufficient prior knowledge about every aspect of the project your decision making will be poor and your ability to design, manage and construct your project will be hindered.

Each decision that you make should be based on research. For effective research it should be clearly categorized into relevant sections (Materials; Processes; Technologies; Resources) with a clear conclusion summing up what you have learnt or what you are going to use.
E.g.

- Photos of similar pieces of furniture
- Ergonomics
- Construction techniques and processes
- Materials
- Finishes
- Hardware

Copying a plan is allowed however you need to modify it based on your research. If this is the case show the research leading up to the plan and then research your modifications using the information below. The best way to do this is to collect pictures from magazines, the net or junk mail and with each picture say what you like or could use. Each picture should contribute to your final design so number the pictures and where you get them from. Use sub headings for your research and even break down your project into components (e.g. The legs, the shelves).Do not forget to research where the project is going to go i.e. space, matching furniture, the sizes of the components that it will house e.g. CD's TV *DVD* etc (a table of sizes is a good idea). Do not just collect pamphlets etc, without highlighting parts etc. Set it out so the marker knows what you have gone through. Tell them where the information has been drawn from.

Check List

- ❑ Research the materials which you could construct your product out of. (timbers, glues, finishes, etc.)
- ❑ Research processes which could be used in the construction of your project (joints, cutting techniques, finishing techniques)
- ❑ Research resources such as existing products which are already on the market, businesses that may be able to help with parts of your project, equipment that is available, etc.
- ❑ Research the technologies which could be used in the construction of your projects. (handles, hinges, skirting, wheels, etc.)

As part of the planning process you must be able to make selections and justify these selections. For all the materials, components and processes that you have had to make a choice on use a table to list your choices and the reason for making your selection. Be

sensible about your choices as they must be appropriate for the construction of the project.

All that you have researched should be included in your selections.

Check List

- ❑ You have selected materials and justified their use in project from a number of different choices
- ❑ You have selected processes and justified their use in project from a number of different choices
- ❑ You have selected technologies and justified their use in project from a number of different choices
- ❑ You have selected resources and justified their use in project from a number of different choices

For example:

Material	**Options**	**Choice**	**Justification**
Back	4mm ply MDF Lining Boards	Lining Boards	Quality finish V- joint adds to the visual detail Affordable
Process			
Trenching	Tenon saw and chisel Router and trenching jig Compound slide saw	Router and trenching jig	Suitable for repetitive procedures Accurate Easy to set up
Component			
Handles	D Handles Brass Antiques style Faux timber handles	Brass Antiques style	Suites style of furniture Affordable Performs function

Another way to include the selection and justification section is to have a title of ‘Selection & Justification’ at the end of each section of research and describe what you did or did not choose and why.

Development of Ideas: Sketching and idea generation; Prototyping, modelling and testing; Production and working drawings

Board of Studies Description
Demonstrates very high level of skills in sketching and idea generation, prototyping, modelling and testing, and in developing production and working drawings (as appropriate)

The Sketching & Idea Generation is an important part of the Development of Ideas, as you get the chance to use your creativity and include features that you liked in the research of existing products and designs. Draw some sketches that relate to your research (at this stage you do not have to like them) and for each drawing put in information from your research and clearly shows that it comes from there. Write about each sketch saying what you like and dislike. (E.g. I took the legs from research picture No. 1 and the doors from picture No.4 but I do not think they work well together so I will try legs from picture No. I but make them wider and doors from picture No.5). Title this writing "evaluation".

You need to have at least **four** of these ideas then combine them into your final one. Now evaluate this and redraw it so that it will become your working drawing.

This section should have extensive hand drawn sketches which document the development of your ideas. There should be a clear progression that demonstrates how your design progresses from the original concept to the detailed finished design.

Prototyping, Modelling & Testing is often shown through your use of jigs and templates. Prototyping and modelling can also be shown by constructing a scaled cardboard model of your project. Testing can be shown through the use of samples such as joints and finishes. Photos of these should be included in your folio. Further modelling can be shown with 3D CAD work using programmes such as Google SketchUp or CREO.

The use of rendered exploded illustrations to clarify concepts and construction techniques is recommended. This section should be finished with a scaled working drawing (preferably CAD) and cutting list. Orthogonal and detail drawings should be used and can be completed with Google SketchUp or CREO.

Check List

- ❑ You have at least 4 different ideas
- ❑ Ongoing Evaluation by listing the likes and dislikes of each of the designs produced
- ❑ Drawings of the final design showing different elements of the design including construction details, cutting plans and cutting lists
- ❑ The use of number of different communication techniques such as sketches and production drawings
- ❑ The use of computer applications such as CAD
- ❑ Photos of any jigs and templates.
- ❑ Photos of any testing/samples you have developed.

Evidence of project management

Board of Studies Description
Clearly describes the management of the project, including a succinct record of the production of the project

This is important area of your folio as it gives the marker an insight into your thought process during your planning and production phases of your project. The process of Project Management is documented through the use of ongoing evaluation and your record of production. The ongoing evaluation relating to the project management is different to your selection and justification of materials, processes, technologies and resources. The ongoing evaluation for this section refers back to your Statement of Intent. There should be written evaluation throughout the folio that is clearly identified.

Example 1
Use a coloured text box to make your evaluative statements

Evaluation
I have found that the most effective and economical timber to use is Brush Box because the price is within my budget and the distinctive grain will enhance the visual appeal of my project

Example 2

Evidence of ongoing Evaluation
I have used ongoing evaluation in this project as I have been making decisions to produce the most appropriate product to meet my statement of intent. Evidence of this has been provided throughout the folio on grey paper. An example of this is shown below.

Evaluation

I like this design. It combines the Australian shape used in idea 3 with the bottle holding method used in Idea 2. This design will be the design that I use for my project.

Check List

- ❑ Make your evaluations stand out in your folio
- ❑ Explain to the marker how to find your on-going evaluation or list areas that you have used on-going evaluation

Your Record of Production demonstrates how you have made the project. You should be taking photos of, sketching and writing down everything you do to make your project. Your photos should be large to demonstrate what you are doing. They should show you wearing all of the correct PPE. Photos can be annotated or linked to diagrams, sketches and working or detail drawings. Each photo needs to have a brief paragraph under it explaining what you are doing and why. All of this demonstrates Links Between Planning & Production through Project Management.

Check List

- ❑ Photos of processes
- ❑ Sketches and/or working drawings linked to photos
- ❑ Annotations on photos (if required)
- ❑ Brief paragraph explaining what is being done in photos
- ❑ Evaluation of different stages, especially where something has changed or been modified from the original plan

Timeline Plan

<u>Board of Studies Description</u>
Develops, applies and evaluates comprehensive and appropriate timeline plans

The use of a time plan is important as it allows you plan out the whole project so that you can finish on time. In a time plan you must include timelines for:

- **projected time**
- **actual time** taken
- an evaluation of the differences between the actual and projected time by explaining why they are different.

Use of a table is a good way to show this information. No one expects you to follow your plan exactly but you should be able to say why you did not. Include breaks for holidays, exams, work placement etc.

<u>Check List</u>

- ❑ You have projected the time for each operation involved in the project Q
  You have supplied the actual time to complete tasks

- ❑ You have evaluated the actual time to complete project against the projected time to complete by giving reasons why differences occurred

For Example:

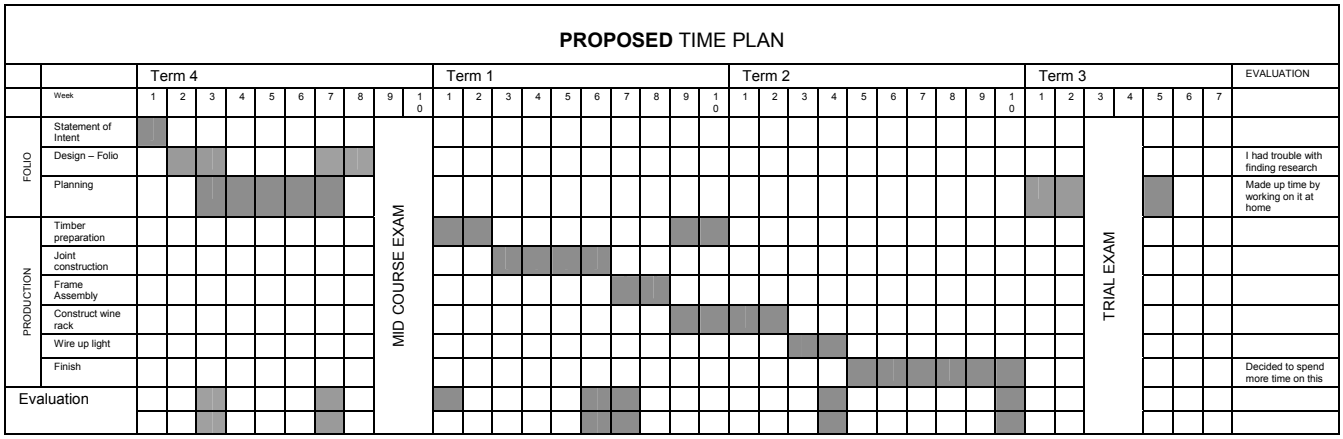

Finance Plan

Board of Studies Description
Develops, applies and evaluates comprehensive and appropriate finance plans

A Finance plan shows the projected cost of materials and services. This plan must show the projected costs of the project as part of the planning phase of the project and it must show the actual cost of materials and services as part of the production phase of the project. As part of the ongoing evaluation of the project, you must evaluate the projected costs of the project and compare them to the actual cost. You can do this by creating an extra column on the Finance plan calling it evaluation. In this column you can give reasons why the projected cost is different to the actual costs.

Check List

- ❑ You have projected the cost of the project
- ❑ You have supplied the actual costs of the project
- ❑ You have evaluated the cost of the project. Compare the projected costs and the actual costs. A pie chart is good to use for comparisons like this
- ❑ You have included all receipts as evidence of the cost of the project

For Example:

				BALANCE	
			BUDGET	$188	
ITEMS	PROJECTED COST	DATE OF PURCHASE	ACTUAL COST		EVALUATION
MDF	$55	22/11/07	$50	$138	Got product on sale
HIRE OF CNC ROUTER	$60	16/02/08	$60	$78	
SCREWS	$10	24/02/08			
RADIATA PINE	$13	20/04/08	$13	$55	
12 VOLT DOWN LIGHT	$16	23/05/08	$14.50	$40.50	Got product on sale
STAIN	$20	23/05/08	$20	$20.50	
BODY FILLER	$14	23/05/08	$15	$5.50	Increased in price
BUDGET	$188		FINAL BALANCE	$5.50	

Evidence of OHS and safe working practices

Board of Studies Description
Demonstrates the use of a wide range of appropriate OHS and safe working practices through suitable documentation and evidence

This is usually seen from the photos on the construction of your project. It is advisable to:

- Have a Risk assessment for the project
- Labelled photographic evidence of you undertaking some processes and demonstrating safe working techniques.
- Identification of OH&S and safety features of the workshop

Check List

- ❑ Use labelled photos of you practicing safe working practices
- ❑ Give a short description of what you are doing and how you are using that machine safely
- ❑ Include photos of safety signs around the rooms and explain what they mean
- ❑ Include some OnGuard safety certificates
- ❑ Ensure there are no photos that show anything being done incorrectly or without wearing the appropriate PPE. You will be penalised marks if there are

Major Project Risk Assessment
Available on Moodle, described as the Job Safety Analysis and Work Method Statement

Appropriate Design &/or Design Modification

Board of Studies Description
Analyses and evaluates the relationships between design modifications (if applicable), materials, components and processes in the development of the major project

In this section you should:

- Comment upon the appropriateness of your design. Does it do what you intended? Did the construction work out the way you planned?
- Identify any modifications made in your project in regards to Materials, Components and Processes and why they occurred.

At this stage it is important that you relate back to your research and planning, as well as the Statement of Intent.

Materials include any materials you modify to make your project, such as timber, glass, metals.

Components include not only fittings such as hinges, shelf supports, handles; but also components of the project itself like doors, drawers, shelves.

Processes are any techniques that you use to make the project. Did you decide to route something instead of cutting it on the table saw for example.

Modifications made so that you better fulfil your Statement of Intent are appropriate. Mistakes, changes and unforeseen problems should be covered at this stage. Be selective with the mistakes you include in here. Any simple mistakes that should have been avoided with proper planning should not be included. Discuss this with your teacher before including anything in this section. The idea is to gain marks by showing how you have adapted your use of Materials, Components and Processes, not take marks away by showing silly mistakes or poor judgement.

Check List

- ❑ Identify if your design needs modification
- ❑ Identify if your Materials need modification
- ❑ Identify if your Components need modification
- ❑ Identify if your Processes need modification
- ❑ State to the marker why your project has certain design features
- ❑ List all the modifications that you have made on your project compared to the original design, materials, components and processes

Example:

Appropriateness of design &/or design modification

This design relate to my statement of Intent as it:

- Holds both wine bottles and wine glasses
- It as been created with a Australian theme so it fits into the decor of my fathers bar

To achieve this I modified existing designs by:

- Adding a wine glass rack to the bottom of the wine rack so that this wine rack serves a multi purpose.
- I used the effect of lighting up the glasses to make this design have a main focus point.
- I used an original method of storing the wine bottles as it not the most efficient way of storing wine bottles but it gives the desired effect of the design

Presentation skills and techniques including ICT

Board of Studies Description
Demonstrates a wide range of presentation skills and techniques, including ICT skills, appropriate to the development of the major project

In this section of the folio you are required to show the markers **evidence** that you have recognised and used a range of different presentation and communication techniques.

Things that you can list in this section are the use of tables, flow charts, production diary, sketches, word processing, use of photos, CAD (working and detail drawings), emails and verbal records like a diary entries

Use scanned images or screen prints to thumbnail images with explanations to show the examiners

A labelled photographic Record of Procedures can be used in this section

Check List

- ❑ List all communication Techniques used in the folio and where they are located in the folio so the marker can check
- ❑ Add anything that doesn't fit anywhere else in the folio as they are still a form of communication

Example

ProDesktop: Used to develop my design and to produce a working drawing as well as rendered image of final product

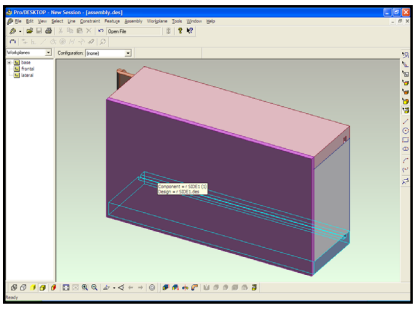

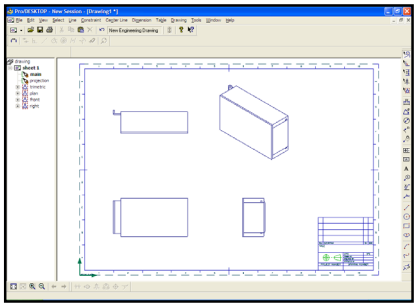

ProDesktop:
Working Drawing derived from 3D image.
Provides scaled dimensioned orthogonal image that enables manufacture

The use of multimedia is becoming more important in industry as they move toward digitalization of information. You can include multimedia in your project by recording parts or all of your folio on CD or setting it up as a website but this is not required to receive full marks for the project.

Check List

- List all computer communication Techniques used in the folio and where they are located in the folio so the marker can check e.g. word processing Tables, Digital Photos, CAD drawings and scanned documents

For Example:

Use a screen print to show illustration of computer use, then name and explain where the application was used

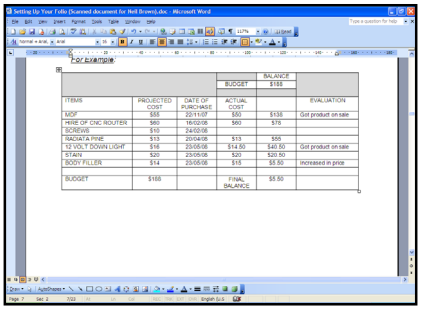

For example

			BUDGET	BALANCE $165	
ITEMS	PROJECTED COST	DATE OF PURCHASE	ACTUAL COST		EVALUATION
MDF	$55	20/11/07	$60	$138	Got product on sale
HIRE OF CNC ROUTER	$60	16/02/08	$60	$78	
SCREWS	$10	24/02/08			
RADIATA PINE	$13	20/04/08	$13	$55	
12 VOLT DOWN LIGHT	$18	23/05/08	$14.50	$40.50	Got product on sale
STAIN	$20	23/05/08	$20	$20.50	
BODY FILLER	$14	23/05/08	$15	$5.50	Increased in price
BUDGET	$165		FINAL BALANCE	$5.50	

Microsoft XL: Used to calculate the cost of project

Ongoing evaluation of the major project

Board of Studies Description
Provides critical evaluation of the major project, including in relation to the statement of intent, research and planning

In this section of the folio you must communicate to the marker what you think about the end result of your project. In this evaluation you must explain to the marker how final product relates the Statement of Intent. This can be done by identifying areas of your design that meet your Statement of Intent and areas that could have been improved in the design.

You must be able to assess the final quality of the product and the processes used in the design, management and construction phases of the project. Therefore you must be able to evaluate the project as whole.

Check List

- ❑ Discussed areas of your project that meet your statement of intent successfully.
- ❑ Discussed areas of your final project that could be improved

This section also relates to the Research & Planning. Because you will have done this throughout the folio you can refer back to specific pages numbers where you have completed your ongoing evaluation. A better way of including this is to be keeping a diary all the way through the project. The diary can be labelled 'Ongoing Evaluation' so the markers know what section it relates to. You could also copy and paste some of your previous evaluations into this section to show what you have done.

Check List

- ❑ Listed page numbers that detail your ongoing evaluation throughout the folio; *and/or*
- ❑ Keep a diary from the start until the end of the project that is labelled 'Ongoing Evaluation'; *and/or*
- ❑ Copy and paste previous evaluations into this section to demonstrate your ongoing evaluations.

Quality of the Product

Board of Studies Description
Demonstrates very high quality in all aspects of the major project production

The examiner is looking for excellence in all areas of your major project production. Your aim for this project is to create a product which has the quality to be sold commercially. The one way that you can show the marker that your project is of commercial quality is to get a specialist or someone in the industry to evaluate the quality of your project so that the marker can recognize the quality that you have achieve in this project. Another way that you can outline the quality of your final product is to list (including photos) the features that make your project a quality product, e.g. the doors are aligned probably, the product sits evenly, the finish is of professional quality, and the construction technique used is the same as commercially made products.

Check List

- ❑ List all the features of your project that you think make your project a piece of quality work, including photos.
- ❑ Present a letter from a specialist or someone in the industry commenting on the quality of the product
- ❑ If any electric wiring was used in the project it must be checked over by a qualified electrician

Example

Quality of the product

The quality of the finished product can be shown by:

- The precision of the Australia shape on the wine rack which was created by using a CNC Router
- The quality of finish which was created by the by staining the wine rack first then giving it a gloss finish.
- The quality of the wiring of the light that has been deemed safe by a qualified electrician.
- The Quality of the joints which fit together perfectly without any gaps.

Evidence of a Range of Skills & Degree of Difficulty

Board of Studies Description
A highly demanding project, with evidence of high quality in the application of a wide range of skills and techniques in the planning and production of the major project

You must be able to show the marker of your project, that a range of skills has been used to complete your project. These include the planning and production of the project, so a list of the skills used and where and perhaps the degree of difficulty would go down well

Check List

- ❑ Identify and list the skills used in the planning and production phases of your project. Use photographic evidence to clarify the skill

For Example:

Evidence of a range of Skills

The skills I used during the planning phase of the project include:

- Sketching
- CAD
- Spreadsheets
- Time management

The skills I used during the production phase of the project include the use of:

- the thicknesser to dress rough sawn timber
- the router table and door set of router bits to construct the panel doors
- a professional spray kit to finish my project

The degree of difficulty of your project is an important factor of marking of the production component of your project because the greater the degree of difficulty of your project the better marks you're going to receive. So let the markers know how hard it was to complete certain parts of your project, both in the planning and the production, by listing them under this heading. It is important to be positive.

Check List

- ❑ List the difficult processes in the construction of your project
- ❑ Explain why this processes were so difficult

For Example:

Degree of Difficulty

The degree of difficulty in my major work is demonstrated by:

- The use of the CNC Router program is a very difficult program to use, so that this took me a long time to work out and to get the machine working properly.
- The process of fixing the light in the wine rack was difficult as I had no experience in wiring and I had to do this to a safe standard
- I had to learn how to set up the panel cutters on the router table which was very time consuming and required a lot of fine adjustment and practice

Links between Planning and Production

Board of Studies Description
Completed project relates closely to what was intended. Close links between actual construction processes, management and thorough research and planning are evident and clearly articulated.

In this section of the folio you must be able to show the marker how the planning, design and management process links to the production of the project. You can do this by listing how you used your planning in the production of your final work

Check List

- ❑ List the links between Research and Production
- ❑ List the links between Time plan and Production
- ❑ List the links between Finance plan and Production
- ❑ List the links between Drawings and Production
- ❑ List any other links between planning and production

For Example

Links between planning and production

The links between planning and production is demonstrated by:

- The use of the information gathered in the research phase to construct ideas that resulted in the development of the final ideas which was constructed in the production phase
- The Time plan was used in the construction phase to make sure my progress was going to plan so that I would be able to finish this project on time.
- The finance plan was used in the construction phase so that this phase didn't come in over budget and this case, extra funds were not needed as the project came in under what was expected.
- Use the sketches and working drawing to produce the final product

Use of appropriate materials, components, processes and technologies

Board of Studies Description
Competently applies and uses a range of appropriate materials, components, processes and technologies in the production of the major project

This section of the folio, the student must demonstrate to the markers that they have used the most appropriate materials for the construction of their project. Under this heading the student must refer back to the research and their selection and justification of materials and link it back to how the materials perform as part of the finished product. Therefore you must be able reinforce your selection of the materials and hardware by explaining to the marker how good they are in the finished product.

Check List

- ❑ Once again list the materials and components used in the construction of your final product.
- ❑ Comment on each of these materials and why they were the most appropriate in the construction of your project
- ❑ You also can Use Photos of your final product to help you explain

For Example:

The Use of Timber Veneered MDF

Workability:
The use of veneered MDF was the most appropriate material for the construction of the shaped parts of the wine rack as this material didn't chip. This was important in the construction of the parts as a CNC Router was used to cut out these shapes and MDF performs best on this machine.

Finish:
Veneered MDF finishes really well. It has an even flat surface with attractive grain that takes any number of finishes like spraying lacquer or oil finishes

In this section you must refer to the industrial processes used in your major project. One way of showing the industrial processes is to list the method of construction. This can be communicated through the use of a flow chart that takes the marker through the different processes used to construct your project. You must be able to show the marker in this flow chart that you have used the correct industrial process in the construction and out-sourcing parts that could not be carried out in a school workshop.

Check List

- ❑ Identify the processes
- ❑ Create construction process using a flow chart outlining all the industrial processes used in the construction of your project.

For Example:

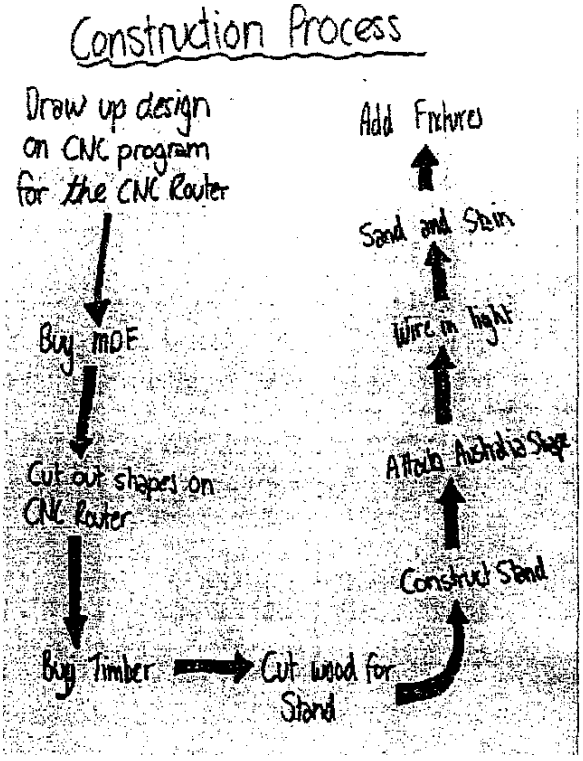

Identify manufacturing processes that you have set up and used. E.g. the CS saw is the Industrial Technology but the process is setting up the saw to cut multiple components to length with accuracy without having to measure

In this section of the folio you are required to list any industrial technologies used in the production of your final project. Industrial technologies refer to tools, machines and equipment used in industry. The best way prove and document that the you have used these machines in the production of your major work is to get picture of you using the machines, tools and equipment, or if not allowed to use the machines or equipment because of Workcover reason then get a picture of the teacher using the machine using it on your project. Alongside each of these photos list the name of the tool, machine or equipment, list the areas of your project which it was used on. If there is a machine that is used in industry and not available to you then identify it as such. E.g. the spindle moulder for routing, an edge bander or a drum sander.

Check List

- ❑ Photos of all machines and tools used in the production of your major work
- ❑ Name the machine or tool used in the photo
- ❑ List all areas which the machine or tools are used on your major work

Example:

Panel Saw
Used by Teacher because of Risk Assessment rating.
Used to:

- rip solid timber to width
- cut groove for ply base
- dock timber to length

Evidence of Solutions to Problems in Production

Board of Studies Description
Demonstrates and critically evaluates how solutions to problems in major project production were addressed

In this section of the folio outline to the markers the problems which you had in the production of product also show how you overcame these problems through research, planning and evaluation. One way you can document this is by keeping a production diary. A production diary is journal which you fill out after each day of production outlining what was done, problems encountered and solutions to these problems. In this diary you should include pictures of any jigs or prototypes and copies of any templates.

Check List

- ❑ Create a production diary outlining the action, problem and solutions on each day of the construction
- ❑ Include Photos of you building you project as a visual aid for the marker
- ❑ Include Photos of any jigs used to overcome any problems in construction
- ❑ Include any Templates used to overcome any problems in construction

Example:
Using photographs and sketches illustrate the problem and explain the process of Rectification

Macquarie Fields High School

Industrial Arts

Industrial Technology

Major Project Folio Outline