Processes—Widening, Framing & Carcase Joints

Joint Types	Other Names	Uses	Applicable Materials	Advantages/ Disadvantages	Example
Through Dovetail	Common Dovetail	Boxes, carcass construction	Solid timber	Advantages - Very strong, aesthetically pleasing. Disadvantages - Complex marking out, Removal of waste needs to be done very accurately.	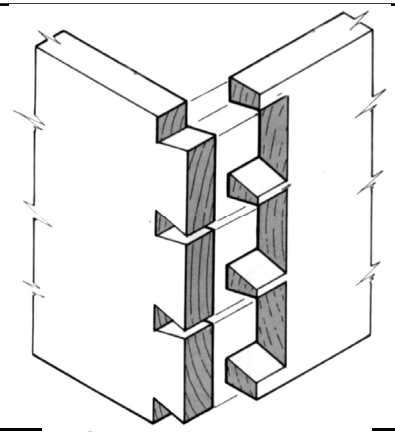
Through Mortise and Tenon	Common Mortise and Tenon	Chairs, framing	Solid timber	Advantages - Very strong, easy to make, easy to mark out. Disadvantages -	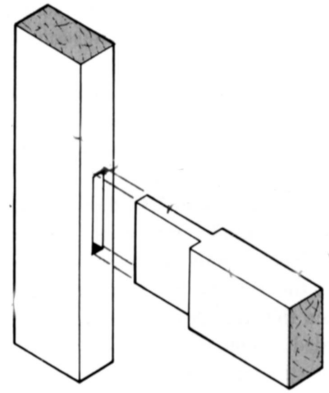
Dowel		Widening, framing, chairs, boxes, carcass construction	Solid timber, manufactured boards	Advantages - Easy to make, easy to mark out first hole, relatively strong. Disadvantages - Positioning of second holes can be difficult.	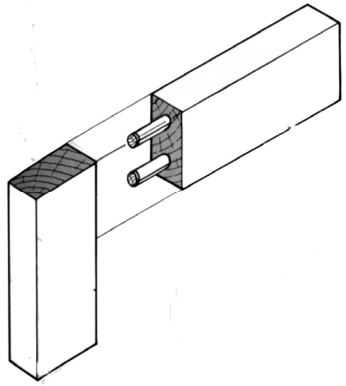

Joint Types	Other Names	Uses	Applicable Materials	Advantages/ Disadvantages	Example
Biscuit		Widening, carcass construction, boxes, framing	Solid timber, manufactured boards	Advantages - Easy to make, fast to make, very easy to mark out. Disadvantages - Not as strong as dowels in thick sections.	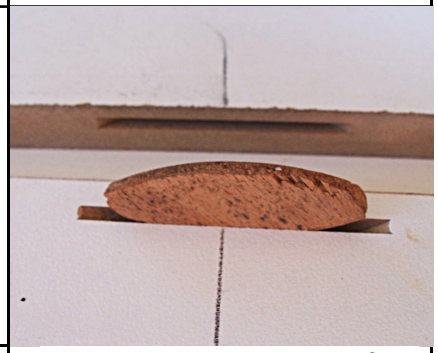
Corner Bridle	Open Mortise and Tenon	Chairs, framing	Solid timber	Advantages - Easy to make, easy to mark out, good strength, aesthetically pleasing. Disadvantages -	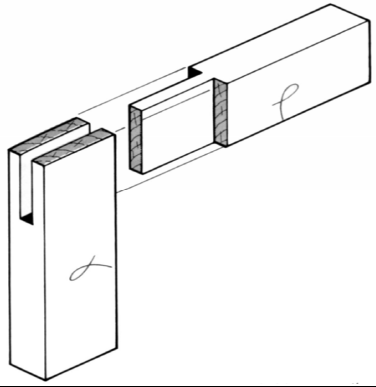
Butt		Widening, carcass construction, boxes, framing	Solid timber, manufactured boards	Advantages - Easy to make, fast to make. Disadvantages - Relatively low strength, aesthetic qualities.	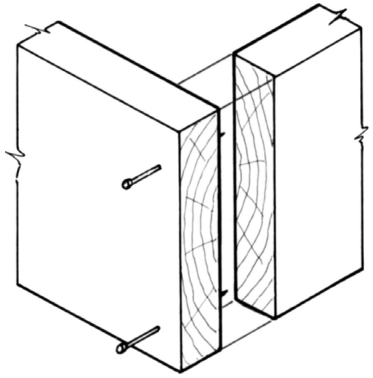

Joint Types	Other Names	Uses	Applicable Materials	Advantages/ Disadvantages	Example
Mitre		Framing, boxes, carcass construction	Solid timber, manufactured boards	Advantages - Doesn't show end grain. Disadvantages - Difficult to make well, Difficult to clamp for gluing.	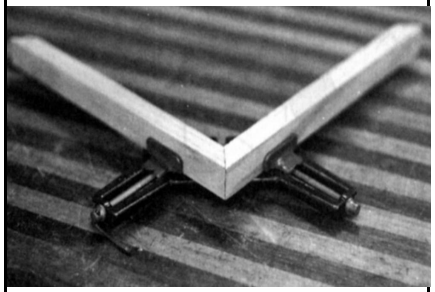
Rebate		Widening, framing, chairs, boxes, carcass construction	Solid timber, manufactured boards	Advantages - Easy to mark out, easy to make, fast to make. Disadvantages - Only fair strength, aesthetic qualities.	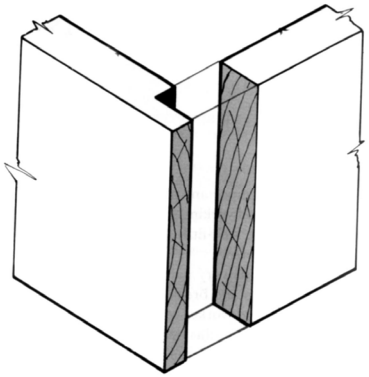
Halving	Cross Lap	Chairs, framing	Solid timber, manufactured boards	Advantages - Easy to make, easy to mark out, fast to make, good strength. Disadvantages -	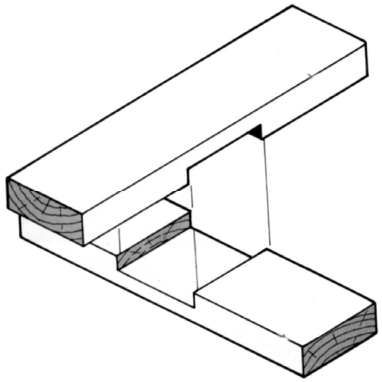

Joint Types	Other Names	Uses	Applicable Materials	Advantages/ Disadvantages	Example
Through Housed		Boxes, carcass construction	Solid timber, manufactured boards	Advantages - High strength, easy to mark out. Disadvantages - See joint at both ends.	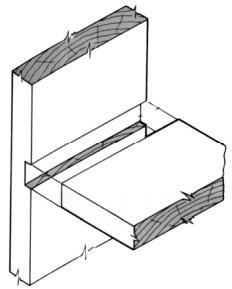
Stopped Housed		Boxes, carcass construction	Solid timber, manufactured boards	Advantages - Do not see joint at one end, high strength. Disadvantages - Have to square end.	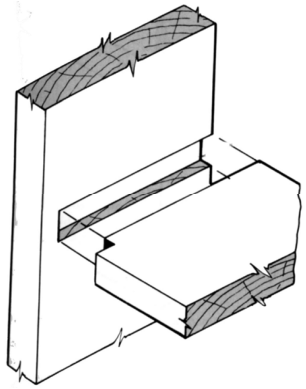
Corner Lap		Framing	Solid timber, manufactured boards	Advantages - Easy to mark out, easy to make. Disadvantages - Aesthetic qualities.	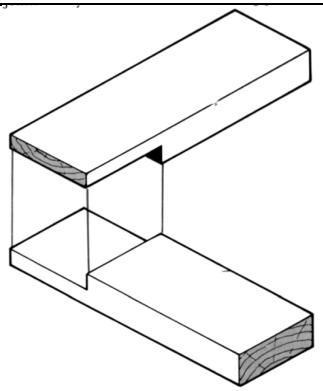

Joint Types	Other Names	Uses	Applicable Materials	Advantages/ Disadvantages	Example
Haunched Mortise and Tenon		Chairs, framing	Solid timber	Advantages - Very high strength. Disadvantages - Difficult to mark out, hard to make.	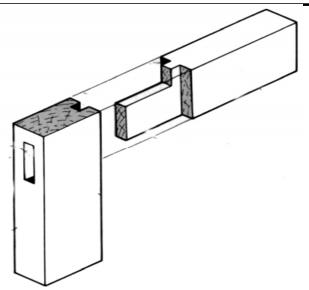
Tongue and Groove		Widening, framing, carcass construction	Solid timber, manufactured boards	Advantages - Good strength, easy to mark out, easy to make. Disadvantages - Aesthetic qualities.	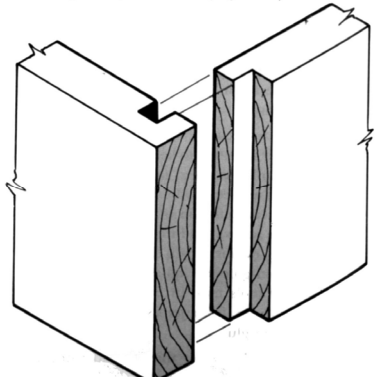
Mitre with Tongue		Framing, boxes, carcass construction	Solid timber, manufactured boards	Advantages - Higher strength than standard mitre. Disadvantages - Difficult to make.	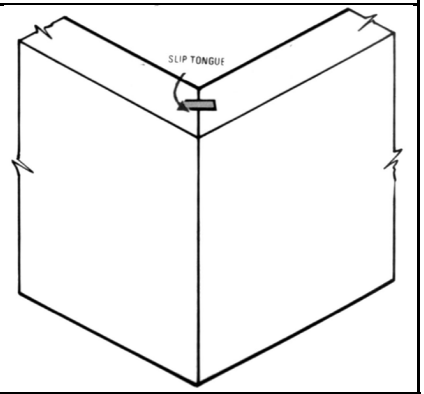

Joint Types	Other Names	Uses	Applicable Materials	Advantages/ Disadvantages	Example
Lapped Dovetail	Dovetail Halving	Boxes, carcass construction	Solid timber	Advantages - Very high strength, good aesthetic qualities. Disadvantages - Difficult to mark out, difficult to make.	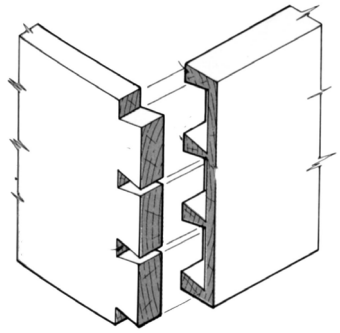
Rebated Mitre		Framing, boxes, carcass construction	Solid timber, manufactured boards	Advantages - Higher strength than standard mitre, aesthetic qualities, easy to mark out. Disadvantages - Difficult to make using hand tools.	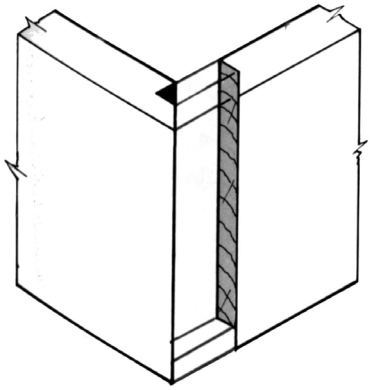
Box Pin		Boxes, carcass construction	Solid timber, manufactured boards	Advantages - Easy to mark out, easy to make, good strength. Disadvantages -	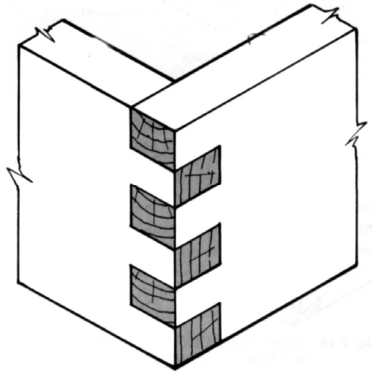

Joint Types	Other Names	Uses	Applicable Materials	Advantages/ Disadvantages	Example
Secret Dovetail	Mitred Dovetail	Boxes	Solid timber	Advantages - Aesthetic qualities, high strength. Disadvantages - Difficult to mark out, difficult to make, hidden dovetails.	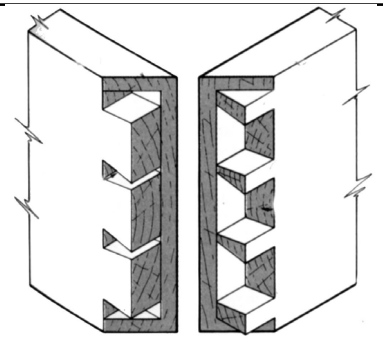
T Halving	T Lap	Chairs, framing	Solid timber, manufactured boards	Advantages - Easy to mark out, easy to make. Disadvantages -	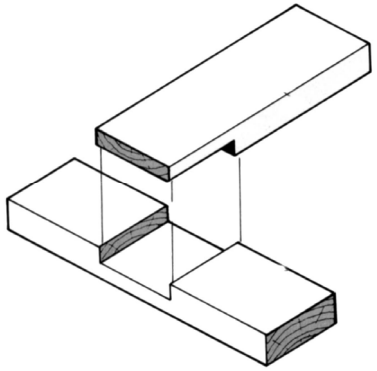
Stub Mortise and Tenon		Chairs, framing	Solid timber	Advantages - East to mark out, easy to make tenon, high strength. Disadvantages - Difficult to make mortise, hidden wedges.	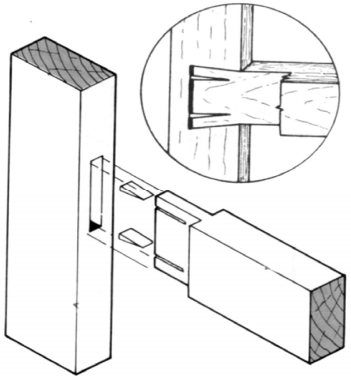

Joint Types	Other Names	Uses	Applicable Materials	Advantages/ Disadvantages	Example
Pinned Mortise and Tenon		Chairs, framing	Solid timber	Advantages - High strength, east to mark out, easy to make. Disadvantages - Visible pin.	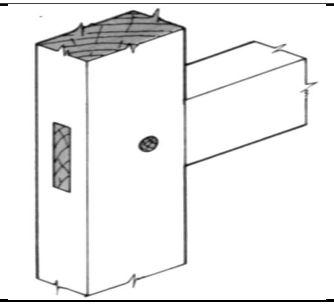
Stopped Bridle		Chairs, framing	Solid timber	Advantages - Easy to mark out, easy to make twin tenons, good strength. Disadvantages - Difficult to make halving using hand tools.	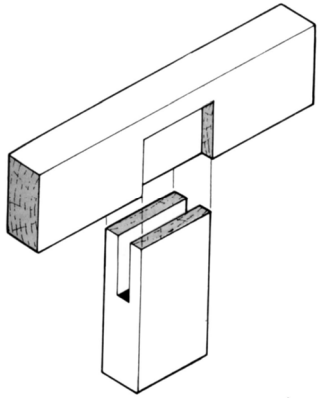
Mitred Bridle		Chairs, framing	Solid timber	Advantages - Aesthetic qualities, easy to mark out, easy to make, good strength. Disadvantages -	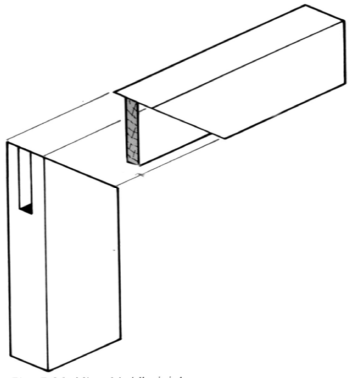

Joint Types	Other Names	Uses	Applicable Materials	Advantages/ Disadvantages	Example
Through Bridle		Chairs, framing	Solid timber	Advantages - Easy to mark out, easy to make, good strength, aesthetic qualities. Disadvantages -	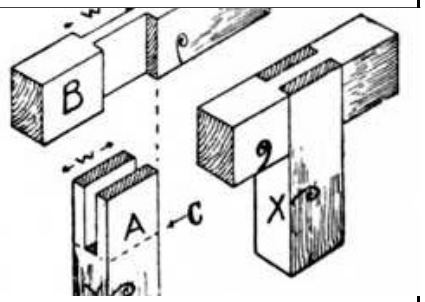
Mitred Lap		Chairs, framing	Solid timber, manufactured boards	Advantages - Easy to mark out, easy to make. Disadvantages -	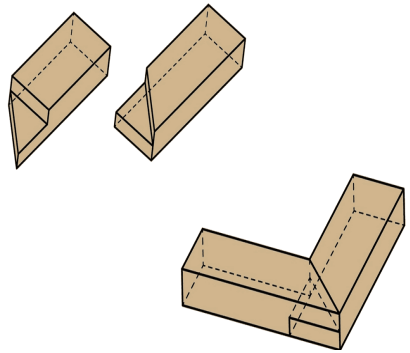
Scribed Joint	Cope & Stick Joint	Framing, carcase	Solid timber	Advantages - Easy to make using router bits. Can be hand cut for odd shapes. Disadvantages - Can be difficult to cut accurately by hand.	