Graphical Communication

Object Drawing
Objects in Industrial Technology can be drawn using a variety of styles, broken into two main types; Pictorial (3D) and Orthogonal (2D). The idea behind using these drawing methods is to convey information to an audience. The audience might be someone who is going to make a product, companies supplying materials or fittings or someone who wants to buy a product.

Sketching
Sketches are generally restricted to informal presentations and recording of ideas. This type of drawing does not need to be done using any equipment other than a pencil and paper, however, they should still be neat and clean. They may include labels and annotations to specify forms of information that cannot be readily observed from the drawing. Freehand sketches are not always drawn to scale so the sizes of components and the processes to be used must be noted on the sketch.

When drawing freehand sketches a commonly used method is to make a three-dimensional pictorial sketch, known as a 3D sketch. However, the orthogonal drawing technique, using two-dimensional views, is very useful for including more information.

It is important to note that each of the following style of freehand drawing has its own set of rules.

- isometric – this is the preferred 3D drawing method.
- oblique
- perspective
- orthogonal

Isometric projection
The angle used in isometric projection is 30°. This angle is used to draw both the left and right hand sides of the diagram.

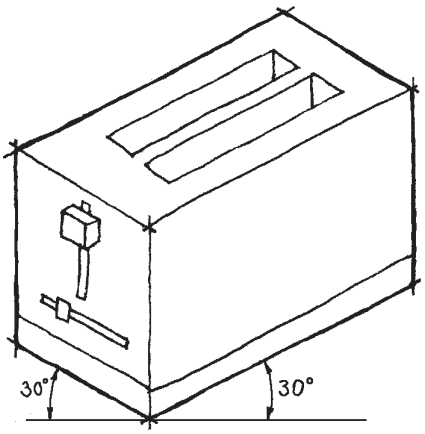

Oblique projection
The angle used in oblique projection is 45°. Additionally, measurements along the 45° line in the oblique are halved in length.

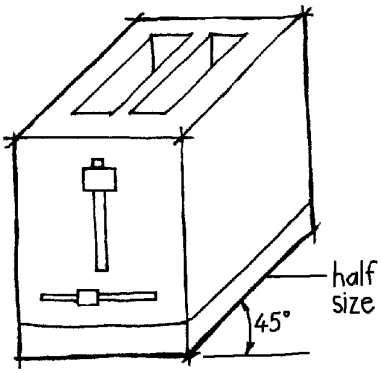

Perspective projection
In the perspective style, each side of the diagram diminishes as it approaches a vanishing point. In figure 4.41 each side of the diagram has a vanishing point. In a variation to this style there can be a single vanishing point.

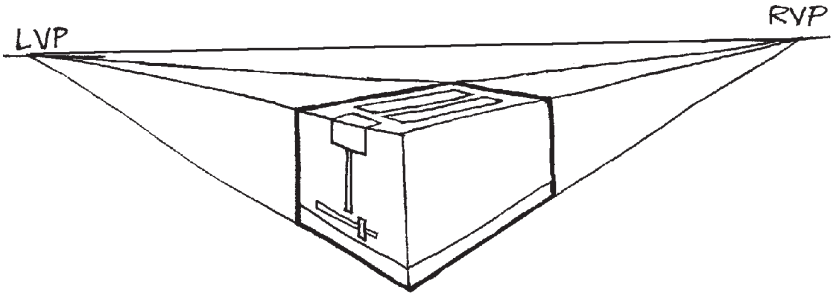

Orthogonal freehand
When 3D freehand sketches are complete, the sizes can be applied to the drawing. However, when the object is complicated, it is difficult to indicate the required sizes to a pictorial sketch. To show all the measurements it is more appropriate to use another style of drawing known as orthogonal drawing. Figure 4.42 shows an orthogonal drawing of a toaster.

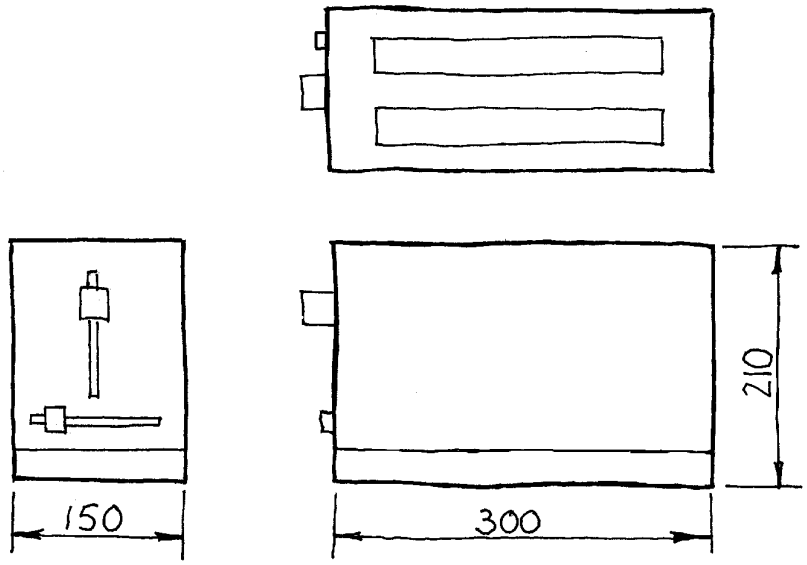

The pictorials give a quick overview of what the toaster might look like; the orthogonal gives the detail that would be needed to construct the toaster.

The orthogonal views have specific locations; each view must be projected from the other views. Sizes are to a scale, and actual sizes can be added by the use of dimensioning.

Rendering
This is the processing of an outline image using color and shading to make it appear solid and three-dimensional. In the case of most of our Industrial Technology drawings we will be trying to show that the project is made from timber by representing the grain pattern and colour of the timber onto the drawing using pencil, a computer graphics package like Photoshop or other types of media.

Production Drawings
Production drawings can be done using the same four styles described above (isometric, oblique, perspective, orthogonal). They are done to a much higher standard than sketches and are always drawn using technical drawing equipment

or Computer Aided Drawing software. They can include detail drawings, exploded views, scales and dimensions.

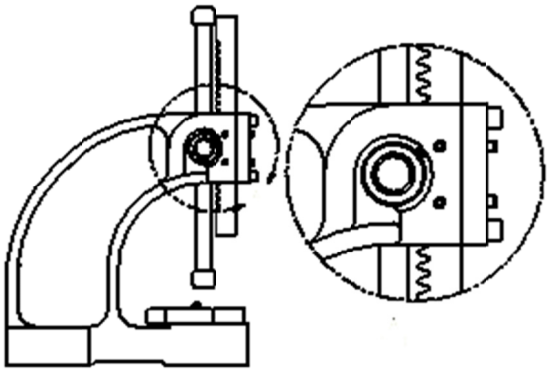

A detail view selects a particular section of a drawing and enlarges that section to show it in more detail. It is generally done using a circle to select the area and a larger circle next to the view to show the detail.

An exploded view shows all of the parts of a product in a disassembled state. All of the parts line up with where they are meant to fit.

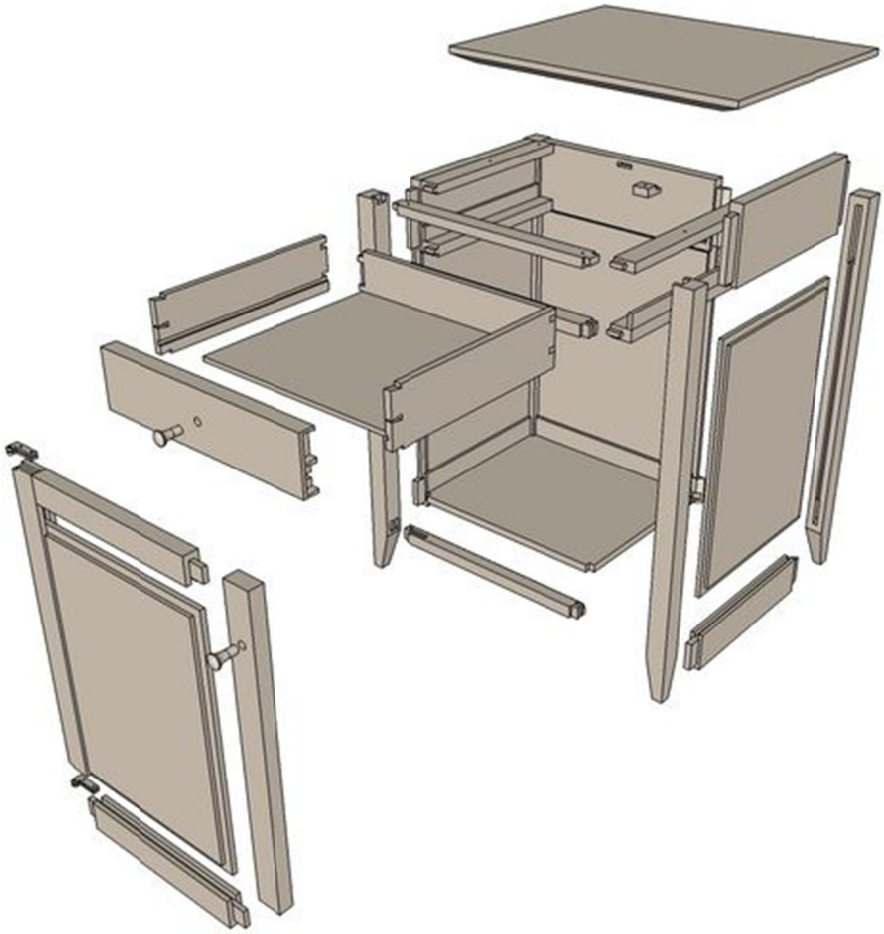

Computer Aided Drawing (CAD) & Presentation Techniques

One of the most significant changes in the way technical drawings are made has been the introduction of computer aided drawing.

CAD is replacing the traditional drawing boards used in technical drawing. Technical areas such as engineering, architecture, product design, surveying and boat building have increased their use of CAD with the introduction of powerful computers into the work place.

Most CAD packages can produce 2D orthographic drawings and 3D pictorial drawings. A significant number of CAD packages draw products in 3D and the convert them to 2D drawings. CAD programs can also be used to model, test and render objects, making the presentation of projects extremely fast, detailed and accurate. Projects can be animated to demonstrate how doors and drawers work. They can be inserted into different backgrounds and have different lighting effects used to change light and shadow on the product.

The advantage with CAD is the convenience of storing drawings, instant retrieval of drawings, and the ability to edit both technical and non-technical information on the drawings. Alternative solutions can be trialed and viewed, and any necessary corrections can be easily changed.

CAD packages have included in their program, libraries of many frequently used items. When drawing furniture, items such as hinges, handles, knobs, shelf supports, are stored in a library, retrieved and placed on the drawing as required.

As the information is stored electronically, CAD drawings can be used to download information to other machines. This is increasing in use, with CAD enabled software being used to control CNC cutting and shaping machines.

Activity:

1. Complete a drawing of a small cabinet that includes one drawer and one door using Google SketchUp. Email it to your teacher with you name on the file.

2. Complete a drawing of a small cabinet that includes one drawer and one door using PTC CREO. Email it to your teacher with you name on the file.