Timber & Timber Products – Properties & Characteristics of Hardwoods & Softwoods

Hardwoods and softwoods

The terms softwood and hardwood indicate the basic cellular structure of the wood and how moisture moves within the living tree. They do not indicate the relative softness or hardness of particular timbers. Softwoods generally come from the coniferous species (pines, firs and spruces) and the timber is usually fine textured. Hardwoods (eucalypts, oaks, even balsa) have broad leaves and the texture of the wood ranges from fine to coarse.

Label which block below is the hardwood and which is the softwood.

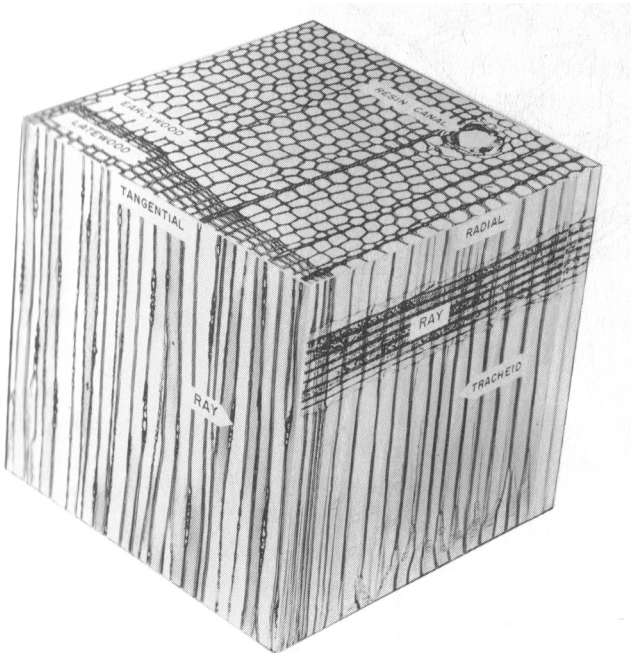

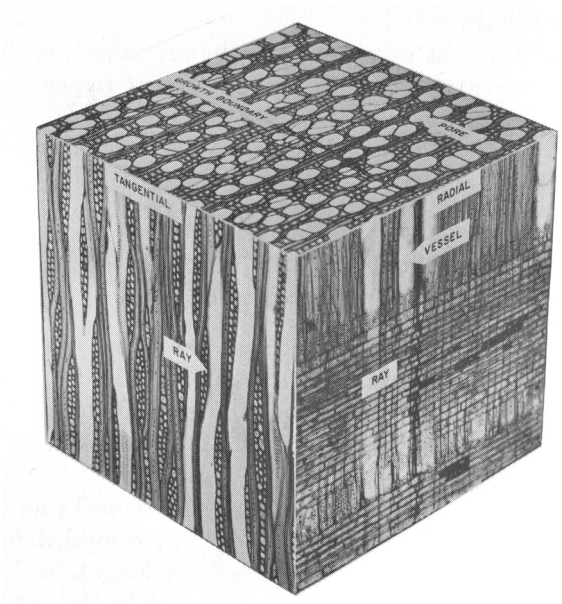

Grain Direction

Imagine a growing tree as a composite structure chiefly composed of elongated, hollow, water-filled cells (roughly 1 mm long in hardwoods and 5 mm long in softwoods) glued together in bundles (like drinking straws) with the lay of the cellulose fibres generally running parallel to the outer surface of the trunk. This is the grain direction, however it can vary due to growth abnormalities. The term grain encompasses both the direction of the fibres and the texture of the wood, i.e. the size and arrangement of the cell structures. (Grain in a sawn board may be described as straight, wavy, spiral, interlocked, sloping and others. The terms side, end and face grain refer to the grain aspect as displayed in a board). Label the face, end and side grain on the diagram below.

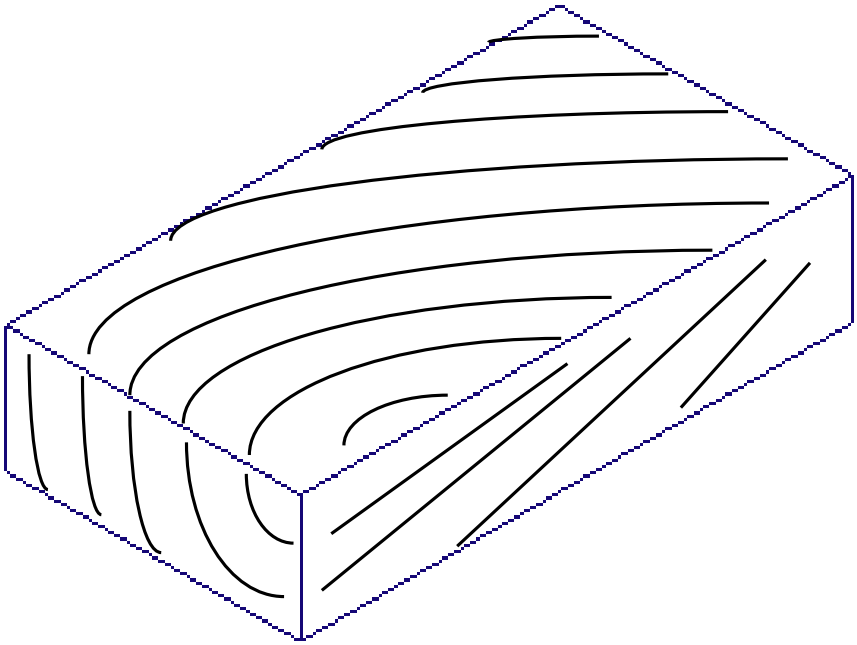

Figure

Figure refers to the pattern produced on the surfaces of timber, resulting from: the nature of the grain, the arrangement and relative dimensions of the cells, and colour variations.

The nature of the figure will depend on the sawing practice i.e. back sawing, quarter sawing, the nature of annual growth rings, the prominence of rays and knots, and deviations from regular grain. Interlocked and wavy grain

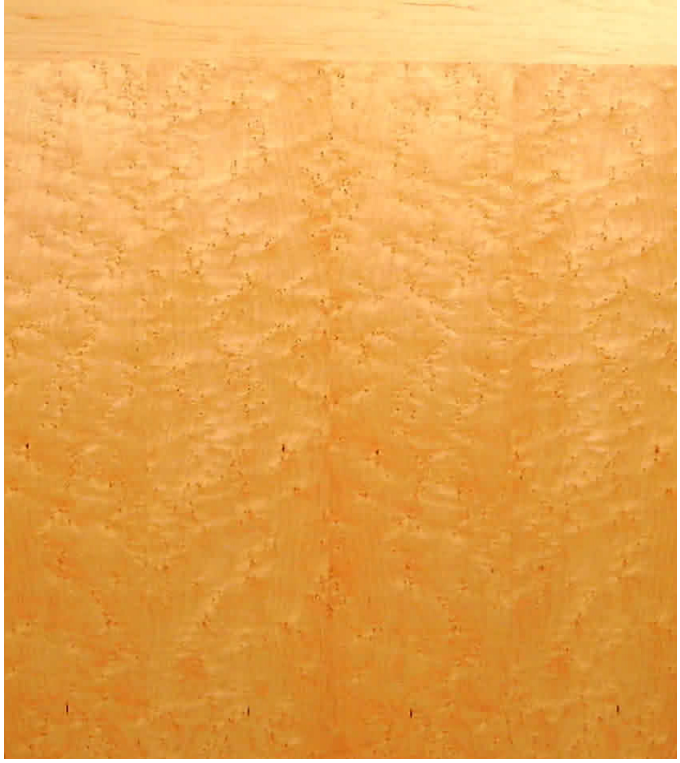

create a striking figure, due to the manner in which light, striking at different angles, is absorbed or reflected by the wood elements.

Types of figure include:

Birds eye: Figure on the surface of a veneer that has numerous rounded areas resembling small eyes.

Fiddleback: Figure in timber or veneer produced by small, regular undulations in the grain.

Ribbon figure: A striped figure produced by cutting timber that has an interlocked grain. Also called striped figure.

Ropey figure: Markings in the form of a twisted rope.

Swirl figure: A figure caused by irregular grain in the region of the knot.

Wavy figure: Markings in the form of waves or undulations. Figures with large undulations are described as 'wavy', while others with small, irregular undulations are 'curly', and those with small, regular undulations are 'fiddleback'.

Wild figure: Irregular markings.

Texture

The texture of timber may be described as being coarse, fine, even or uneven.

The differentiation between coarse and fine texture is made on the basis of the size and arrangement of the wood cells.

Softwoods are normally considered to be fine textured, whereas hardwoods may span the range from coarse to fine.

Colour
Most timbers show variation in colour between species and within species. Colour descriptions usually relate to the heartwood of the species and may be significantly different from that of the sapwood. Colour variation can be significantly affected by environmental factors such as the minerals in the ground where the tree is growing.

Colour may also vary in use and by the application of finishes.

Timber exposed to light will change colour and unprotected timber, exposed to the weather, will eventually become silvery grey.

Density and Weight
As applied to timber, density is the mass of wood substance and moisture enclosed within a piece expressed in kilograms per cubic meter. As this mass will vary dependent on the amount of moisture in the piece, density is often expressed in a number of ways:

Green Density is the density of the timber unseasoned. This will vary considerably due to the initial moisture content.

Dry Density is the density of timber dried to a moisture content of 12%.

Basic Density is the oven dry mass over green volume.

Basic Density is most relevant for research and paper manufacture. Green and dry densities are more relevant in building design and construction.

In general terms, density is one of the most reliable indicators of strength, as well as several other properties, such as stiffness, joint strength, hardness, ease of machining and fire resistance.

The density of timber varies considerable both between and within species. The wood substance that makes up the walls of the wood cells (fibres, vessels or rays) has a basic density of approximately 1500 kg/m3. However, as timber comprises both wood substance and voids, such as the central cavities in cells, density can vary considerably due to the cell structure particular to each species and each tree.

Strength, Stiffness and Hardness

Strength and stiffness are allied to density and as the density of boards from an individual species varies considerably so does the strength. One aspect of strength is the load carrying capacity of a length of timber. Stiffness describes a length of timber's resistance to deflection under load.

Other aspects of wood strength generally considered are:

- tensile — resistance to forces trying to pull the fibre structure apart
- compressive — resistance to squeezing or crushing forces both parallel and perpendicular to the grain
- shear — resistance to shearing forces that might lead to fibre separation along/across a plane.
- impact — ability to absorb shock loads.

Wood is not like aluminium or steel whose physical properties are mostly independent of direction. For example, the tensile strength of timber varies with grain direction and is at a maximum parallel to the grain and at a minimum perpendicular to the grain.

Within a board moisture moves from wetter to drier zones until the MC is more or less constant throughout. The Moisture Content of seasoned wood will adjust to the relative humidity of its environment — either absorbing water vapour from the atmosphere or evaporating moisture into it — until the wood reaches it’s Equilibrium Moisture Content (EMC).

So although the components of a fully seasoned wooden structure may have 12% MC when in the temperate coastal zone of Australia, the same structure's MC might fall to 7–8% in dry inland conditions or rise to 18–20% in monsoonal conditions in northern Australia.

Hardness refers to the difficulty in sawing, planing, resistance to wear or abrasion and the resistance to indentation.

Durability and Stability

If long term MC exceeds 20% the wood's susceptibility to decay/dry rot is greatly increased, particularly so in warmer temperatures and in conditions where free moisture is trapped within the structure and oxygen can be absorbed from the atmosphere. MC changes also affect strength; a change from 12% MC to 18% MC will decrease the modulus of rupture by perhaps 25%.

Unless all surfaces and joints are coated with an appropriate finish the absorption or release of water vapour will prompt dimensional movement (swelling/contraction) in structural members which, in effect, changes tension/compression in the structure.

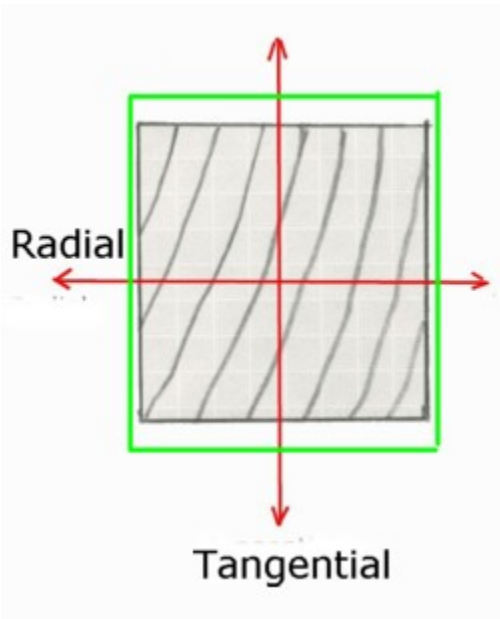

Movement is generally insignificant longitudinally but can be quite significant in the tangential dimension (along the rings) – often being more than twice the movement in the radial dimension. The green rectangle in the image shows expansion due to moisture intake, though greatly exaggerated.

Painting, varnishing, epoxy coating or other moisture barriers slow the rate of adjustment to the environment and the wood takes some time to adjust to EMC, so daily humidity changes should have no significant effect, but seasonal changes certainly will. Moisture is more readily absorbed through end grain because of the capillary action provided so special measures may need to be taken to minimize that absorption.

Weathering

Weathering is the breakdown of the exposed surfaces of a piece of timber due to action of sunlight, rain, wind, dew, frost and fumes. These cause deterioration and erosion of the surface cells through degradation of the lignin that binds the wood cells together and sugars, starches and extractives are all washed away from exposed timber surfaces.

Initially dark colours become paler through leaching and bleaching and pale colours darken because of oxidation. Eventually all exposed timber surfaces become grey. The surface may appear dirty or blotchy in situations favouring fungal organisms, but in dry or coastal climates an attractive silvery grey usually results.

Weathering is a process distinct from decay, also called rot, which is caused by fungi.

Weathering is generally a very slow process. The effects of weathering do not significantly alter most properties of the timber, except for surface abrasion resistance.

Unprotected timber surfaces develop checks and cracks due to the repeated absorption and desorption of water by the surface. These cracks gradually increase in depth and can allow exposure of untreated interior sections of preservative treated timbers.

Weathering protection may be provided by the application of coatings such as paints, water repellents, water-repellent preservatives and pigmented penetrating stains. The main objective of these is to prevent or retard the uptake of moisture and the absorption of ultraviolet light. However, water-repellent preservatives and stains do not generally prevent timber surfaces from greying.

No clear coating can entirely block the weathering effect of the sun on the timber surface. The resultant degradation of the wood can quickly cause detachment of the coating from the timber surface. Clear coatings do not last as long as paints in fully exposed applications.

Timber & Timber Products – Timber Industry Terms

Grade

Timber grading is the process by which timber is sorted into groups with similar appearance or structural properties in each group. Inevitably there is a range of properties within a group and significant overlap in properties between the groups.

Timber is specified by its grade, so it is important to understand the terms used in grading, and the implied properties and characteristics of each grade.

The sorting of timber by appearance is quite different to the sorting used for structural products. As there may be cases where the timber has both appearance characteristics and structural properties, it is important to understand the implications of both types of grades.

Appearance grading is the process of sorting timber into groups based entirely on the appearance of the surface of the timber. Most timber used in furniture construction will make use of this type of timber.

To grade according to appearance, the timber is carefully examined by a trained grader for the presence of growth characteristics such as large or loose knots, for production degrade effects such as splits or cracks, and for cup, bow, spring and warp or twist. The timber can be sorted as to the severity of any of these characteristics in each board. In general, the most severe of any of the appearance characteristics in the appearance grades will govern the grading of the timber.

Relevant Australian Standards for appearance grading can be found in Appendix 1 for Hardwoods and Appendix 2 for Softwoods.

Structural grading is the process by which timber is sorted into groups with similar structural properties in each group. Inevitably there is a very substantial range of properties within a group and significant overlap in properties between the groups. Structural grading can be performed in a number of ways including the following:

- Visual stress-grading
- Machine stress-grading
- Machine proof-grading

The two most commonly used methods in Australia are visual stress-grading and machine stress-grading, with use of machine proof-grading being limited.

In theory, any method that sorts timber into groups of material with similar structural properties could be used. However, in order to be valid, the sorting methods must produce results, which are both consistent and repeatable. To achieve this level of reliability Australian Standards have been developed.

Relevant Australian standards for structural grading of timber include:

- AS/NZS 1748: 2003 Timber Stress-graded - Product requirements for mechanically stress-graded timber
- AS 2082: 2003 Visually stress-graded hardwood for structural purposes
- AS 2858: 2003 Timber - softwood - visually stress-graded for structural purposes
- AS 2878 Timbers - classification into strength groups
- AS 3519 Timber - Machine Proof Grading

These Standards are used in production as the basis of fixing a grade stamp to each piece of timber. Users of the timber do not have to be experts in the use of the Standards, but should be aware of their existence as they can assist in specifying the correct material for a project.

Manufactured boards also undergo similar grading systems that reflect the finish quality of the sheet and also the structural properties. Examples of this include Superfine Particleboard compared to the lower quality Qualboard; CD Plywood compared to Interior Grade Plywood and BB Grade Plywood; Marine Plywood compared to Flexiply. There are a significant number of variations for each type of manufactured board.

Sizes - Timber boards
Most timber boards will be available in standard sizes, generally derived from when dimensions were measured in imperial units such as feet and inches. Thickness will usually be 12, 18 or 19mm. 12mm = ½", 18 and 19mm = ¾". Board lengths are usually multiples of 300mm or 1 foot, such as 1.2, 1.5, 1.8 or 2.4m. The width of boards may vary. Timber boards can also ordered in custom sizes from suppliers or ordered as close to the desired size as possible and then run through the thicknesser, over a jointer or across the table saw to change the dimensions.

Some 'boutique' timber companies may also sell their timber boards by the superfoot. 1 super foot equals a piece of timber that is 300mm long x 125mm wide x 25mm thick. This is generally the case for the more exotic types of timber.

Sizes - Manufactured boards
Manufactured boards are those such as Particleboard, MDF, Plywood, and Hardboard. These materials come in standard sheet sizes of 2400mm x 1200mm. Some companies are generous enough to provide a little extra and sell their sheets 2440mm x 1220mm. This extra material helps a lot when making a product using round numbers as dimensions such as 400mm, 600mm, 1200mm and so on. Having the extra material allows for the thickness of the saw blade while keeping dimensions simple and reducing waste.

Like timber boards, manufactured boards can also be ordered in custom lengths, widths and thicknesses.

Timber & Timber Products – Timber Defects

Defects may be naturally occurring or can be man-made. Natural defects can be due to many reasons such as environmental factors, growth patterns, soil composition, etc. Man-made defects can occur at many points, from the felling of the tree, transport, storage, sawing, drying, etc.

Although you can work around some defects such as knots, or cut off defects such as splits, boards that are heavily twisted, bowed, cupped, or crooked usually are not usable.

Bow	A curve along the face of a board that usually runs from end to end.	
Checking	A crack in the wood structure of a piece, usually running lengthwise. Checks are usually restricted to the end of a board and do not penetrate as far as the opposite side of a piece of sawn timber.	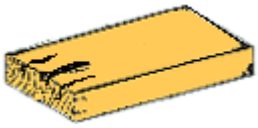
Spring	Warping along the edge from one end to the other. This is most common in wood that was cut from the centre of the tree near the pith.	
Cupping	Warping along the face of a board across the width of the board. This defect is most common of plain-sawn lumber.	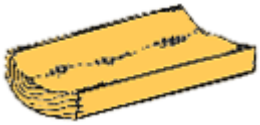
Split	A longitudinal separation of the fibres which extends to the opposite face of a piece of sawn timber.	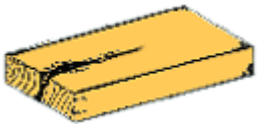
Twist or Wind	Warping in lumber where the ends twist in opposite directions.	
Wane	The presence of bark or absence of wood on corners of a piece of lumber.	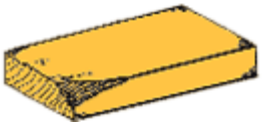

Blue Stain	A discoloration that penetrates the wood fibre. It can be any colour other than the natural colour of the piece in which it is found. It is classed as light, medium or heavy and is generally blue or brown.	
Machine Burn	A darkening of the wood due to overheating by the machine knives or rolls when pieces are stopped in a machine.	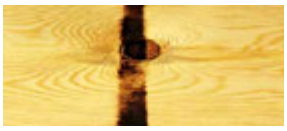
Resin or Gum Veins	An accumulation of resinous material on the surface or in pockets below the surface of wood. Also called gum or sap.	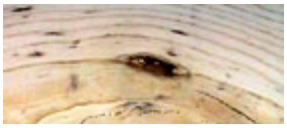
Loose Knot	A knot that cannot be relied upon to remain in place in the piece. Caused by a dead branch that was not fully integrated into the tree before it was cut down.	
Tight Knot	A knot fixed by growth or position in the wood structure so that it firmly retains its place in the surrounding wood.	
Wormholes	Small holes in the wood caused by insects and beetles.	

Appendix 1 - AS2796 Timber – Hardwood – Sawn and milled products summary

Feature	SELECT GRADE (SEL)	MEDIUM FEATURE GRADE— Standard (MF)	HIGH FEATURE GRADE (HF)
On exposed surfaces			
Tight Knots and any associated voids; individually or in aggregate in any 1 m of board length	Not exceeding 15 mm or 1/4 of the surface on which it occurs	Not exceeding 40 mm or 1/3 of the surface on which it occurs	Not exceeding 50 mm or 3/8 of the surface on which it occurs
Loose Knots	Not permitted	Not permitted	As for holes
Holes (borer, non-enclosed termite galleries and other)	Not exceeding— 2 mm (largest dimension) 6 in any 100 mm x 100 mm or equivalent area 12 in any 300 mm x 300 mm or equivalent area	Not exceeding— 3 mm (largest dimension) 20 in any 100 mm x 100 mm or equivalent area 30 in any 300 mm x 300 mm or equivalent area	Pinhole unlimited Other than pinhole, largest dimension— Not exceeding 3 mm 20 in any 100 mm ´ 100 mm or equivalent area 30 in any 300 mm x 300 mm or equivalent area Exceeding 3 mm and not exceeding 10 mm 3 per 1m of board length Exceeding 10 mm not Permitted
Slope of grain	Not exceeding 1 in 8	Not exceeding 1 in 8	Not exceeding 1 in 8
Tight gum veins	Not exceeding— surface width measured across the feature, 2 mm individual length, 250 mm	Quartersawn; surface width measured across the feature, not exceeding 5 mm Backsawn— Extent across face	Quartersawn; surface width measured across feature, not exceeding 5 mm Backsawn— Extent across face

	aggregate length, 1/2 the length of the piece	unlimited. Surface width measured across the feature not exceeding 60 mm Individual length not exceeding 1 m Depth not exceeding 2 mm	unlimited Depth not exceeding 2 mm
Loose gum veins	Not permitted	Not one surface to another Not intersecting an end Surface width measured across the feature, not exceeding 3 mm Agg. Length not exceeding 1/5 of the length of the piece	Not one surface to another Not intersecting an end Surface width measured across the feature, not exceeding 3 mm Agg. Length not exceeding 1/5 of the length of the piece
Gum pockets, latex pockets and overgrowth of injury	Not permitted	Not one surface to another Surface width measured across the feature, not exceeding10 mm Length not exceeding 50 mm Depth not exceeding 2 mm when backsawn	Not one surface to another Surface width measured across the feature, not exceeding 15 mm Length not exceeding 75 mm Depth not exceeding 2 mm when backsawn
Knot checks	Not permitted	Width not exceeding 2 mm	Width not exceeding 3 mm
Checks other than internal (Note 1)	Width not exceeding 1 mm	Width not exceeding 2 mm	Width not exceeding 2 mm

	Individual length not exceeding 250 mm	Individual length not exceeding 250 mm	
Stain (Note 2)	Slight (Note 3)	Unlimited	Unlimited
Natural discolouration Other discolouration including sticker marks	Not permitted	Not permitted	Not permitted
Black speck	Slight	Unlimited	Unlimited
Non-Lyctid-susceptible sapwood (which includes appropriately treated sapwood)	Unlimited	Unlimited	Unlimited
Burls	Unlimited	Unlimited	Unlimited
Hobnails	Unlimited	Unlimited	Unlimited
Want, wane and mechanical damage	Not permitted	Not permitted	Not permitted
On concealed surfaces			
Features listed above if not specified below	To the limits on the exposed surface of HIGH FEATURE GRADE	To the limits on the exposed surface of HIGH FEATURE GRADE	To the limits on the exposed surface of HIGH FEATURE GRADE
Want, wane and mechanical damage	Not exceeding— 1/3 of the width of the surface on which it occurs Agg. Length 300 mm	Not exceeding— 1/3 of the width of the surface on which it occurs Agg. length 300 mm	Not exceeding— 1/3 of the width of the surface on which it occurs Agg. Length 300 mm
Stain	Unlimited	Unlimited	Unlimited

Appendix 2 - AS4785 Timber – Softwood – Sawn and milled products

Feature	Clear grade	Appearance grade	Select grade	Standard grade	Utility grade
On exposed surfaces					
Sound tight knots:					

Any partial encasement not exceeding 1/2 of the perimeter of the knot Any partial encasement exceeding 1/2 of the perimeter of the knot	Not permitted Not permitted	Individually or in aggregate in any 1 m length of board—not exceeding 1/5 of the width of the surface on which it occurs Partial encasement—not permitted Not permitted	Not exceeding ½ of the surface on which it occurs Any associated void—not exceeding 3 mm and not extending from one surface to another Width not exceeding 10 mm—no more than 3 in a piece Width exceeding 10 mm but not exceeding 20 mm— no more than 1 in a piece	Not exceeding 2/3 of the surface on which it occurs Any associated void—not exceeding 6 mm and not extending from one surface to another Width not exceeding 10 mm—unlimited Width exceeding 10 mm but not exceeding 20 mm— no more than 2 in a piece	Not exceeding 3/4 of the surface on which it occurs Any associated void—not exceeding 20 mm and not extending from one surface to another Width not exceeding 30 mm—unlimited Width exceeding 30 mm but not exceeding 3/4 of the surface on which it occurs—no more than 2 in a piece
Loose knots and all holes (including knot holes, cone holes and borer holes)	Not permitted	Not permitted	Width not exceeding 10 mm—no more than 3 in a piece	Width not exceeding 12 mm—no more than 4 in a piece	Width not exceeding 12 mm—unlimited Width exceeding 12 mm but not exceeding 30

					mm— no more than 3 in a piece
Slope of grain	Decking—not exceeding 1 in 8 Other—not exceeding 1 in 5	Decking—not exceeding 1 in 8 Other—not exceeding 1 in 5	Decking—not exceeding 1 in 8 Other—not exceeding 1 in 5	Decking—not exceeding 1 in 8 Other—not exceeding 1 in 5	Decking—not exceeding 1 in 8 Other—not exceeding 1 in 5
Pith	Not permitted	Not permitted	Width—not exceeding 10 mm Length—not exceeding 300 mm	Width—not exceeding 10 mm—unlimited Width exceeding 10 mm but not exceeding 15 mm, length—not exceeding 300 mm	Width—not exceeding 10 mm—unlimited Width exceeding 10 mm but not exceeding 15 mm, length—not exceeding 300 mm
For light decking only	Material within 100 mm of the pith—not permitted	Material within 100 mm of the pith—not permitted	Material within 100 mm of the pith—not permitted	Material within 100 mm of the pith—not permitted	Material within 100 mm of the pith—not permitted
Resin pockets, bark pockets	Not permitted	Not permitted	Width—not exceeding 6 mm Length—not exceeding 50 mm Extending from one surface to another— not permitted	Width—not exceeding 10mm Length—not exceeding 75 mm Extending from one surface to another— not permitted	Width—unlimited Length—unlimited Extending from one surface to another— not permitted

Knot checks	Not permitted	Width—not exceeding 1 mm	Width—not exceeding 1 mm	Width—not exceeding 2 mm	Width—not exceeding 2 mm
Checks other than internal	Not permitted	Width—not exceeding 1 mm	Width—not exceeding 1 mm	Width—not exceeding 1 mm	Unlimited
Needle trace	Permitted, provided no decay and surface is unbroken	Permitted, provided no decay and surface is unbroken	Permitted, provided no decay	Permitted, provided no decay	Unlimited
Stain	Not permitted	Not permitted	Slight	Slight	Unlimited
Want, wane and mechanical damage	Not permitted	Not permitted	Not permitted	Not permitted	Not permitted
On concealed surfaces					
Features listed above if not specified below	To the limits on the exposed surface of this grade	To the limits on the exposed surface of this grade	To the limits on the exposed surface of this grade	To the limits on the exposed surface of this grade	To the limits on the exposed surface of this grade
Knot checks	As for exposed surface	As for exposed surface	As for exposed surface	Unlimited	Unlimited
Want, wane and mechanical damage	As for exposed surface	As for exposed surface	Width—not exceeding 6 mm on the face or edge on which it occurs Aggregate length— not exceeding 450 mm Occurrence—	Width—not exceeding 6 mm on the face or edge on which it occurs Aggregate length— not exceeding 450 mm Occurrence—	Width—not exceeding 6 mm on the face or edge on which it occurs Aggregate length— not exceeding 600 mm Occurrence—

			on one arris only	on one arris only	on one arris only
Sticker marks	Unlimited	Unlimited	Unlimited	Unlimited	Unlimited
Needle trace	As for exposed surface	As for exposed surface	As for exposed surface	Unlimited	As for exposed surface
Stain	As for exposed surface	As for exposed surface	As for exposed surface	Unlimited	As for exposed surface

Review Questions – Timber & Timber Products

1. Describe, in detail, the differences in cellular structure between hardwoods and softwoods.

Hardwoods:

……
……
……
……
……
……

Softwoods:

……
……
……
……
……
……
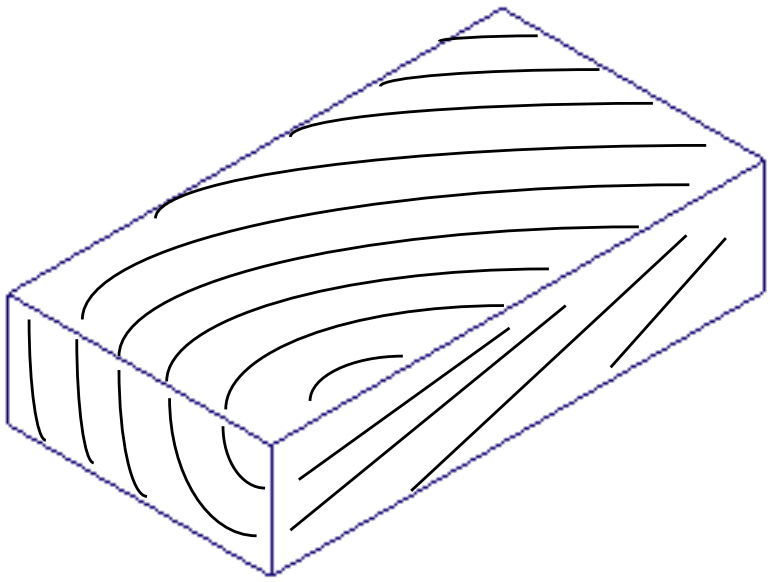
2. On the piece below, label the length, width and thickness.