Furniture Hardware

Screws

There are two basic types of screws. Those used for wood and those for sheet metal. The main difference is in the shape of the thread. Sheet metal screws have a sharper and more pronounced thread to enable them to better penetrate metal surfaces; whereas wood screws have a wider spaced, shallower thread because they are used on softer surfaces. Both types of screws are measured in the same manner and are identical in all other respects.

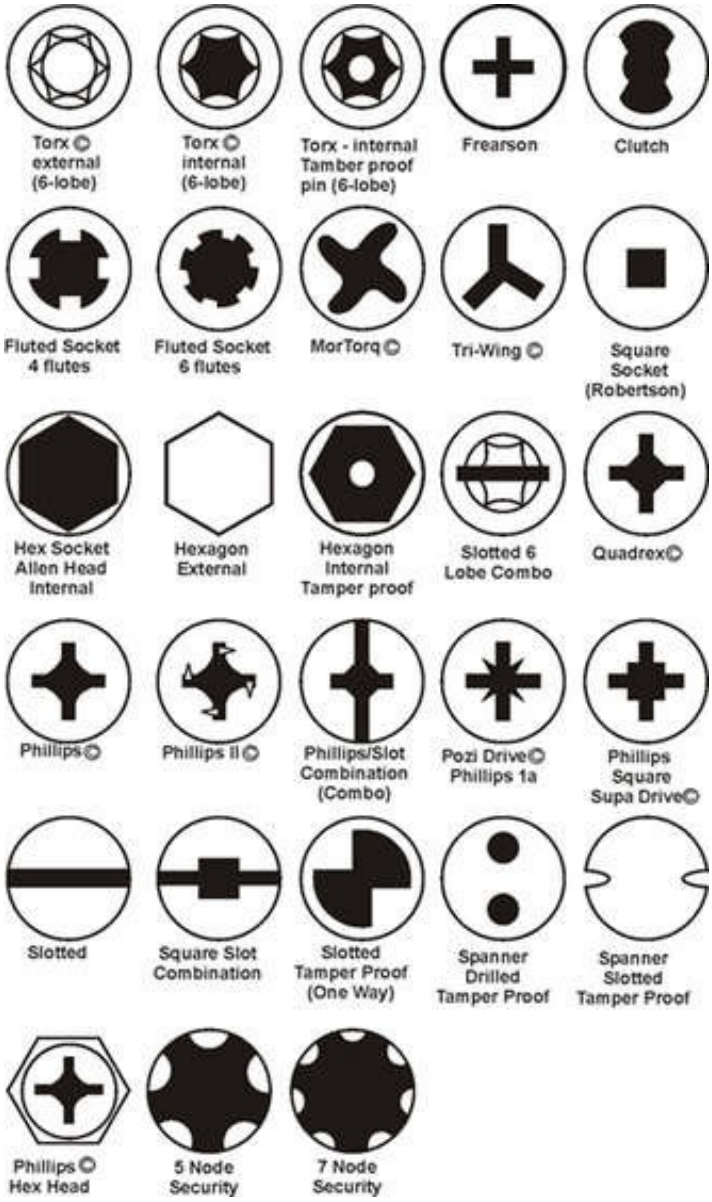

Wood screws are generally made of mild steel or brass. The screw consists of the head, shank and thread. The head of the wood screw is usually slotted for use with a flat bladed screwdriver. Other wood screws may have heads shaped for a Phillips head screwdriver. Some less common types include Torx, Square and Posidrive.

Mild steel screws are often galvanised for use in damp conditions. If they are not galvanised properly the steel can react with the timber and produce a fungus that can stain the timber. Nickel plating is another common surface coating applied to mild steel screws. Stainless steel screws are also available.

Screws are generally used for joining timber, strengthening joints, fittings such as catches or hinges and attaching other cabinetry hardware.

Most screws are named according to the shape of the head of the screw. The four common types are the Countersunk Head, Raised Head, Round Head and Coach Head.

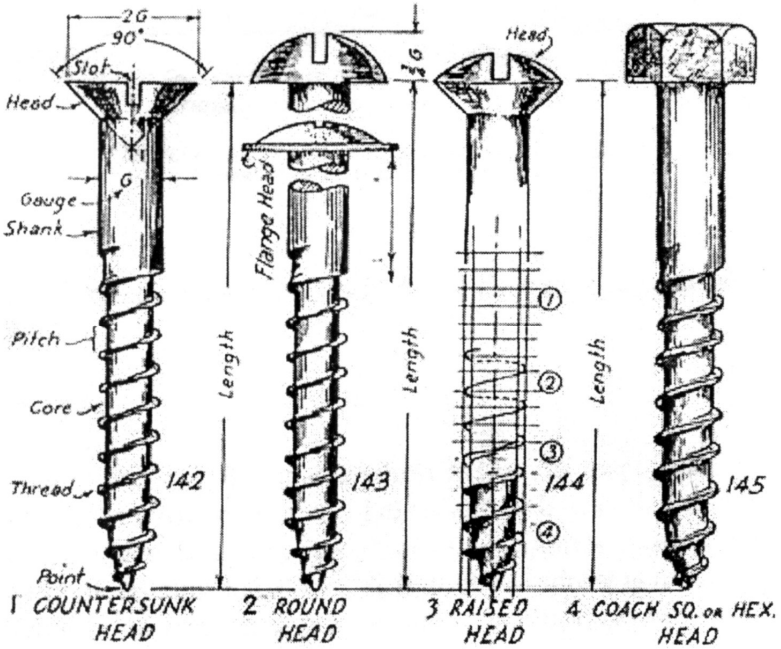

Countersunk screws are the most common type used in woodwork. They are a general purpose screw and can be used when the head of the screw is to fit flush with the level of the timber.

Round head screws have a flat underside and a dome shaped top side. These are usually used as decorative screws or when the material is too thin to allow the use of a countersunk screw.

The raised head screw has the dome shaped top side of the round head and the countersunk underside of a countersunk screw. This is a decorative screw that also provides greater strength than the round head variety.

A coach head screw has a hexagonal shaped head. These are driven with a spanner or socket rather than a screwdriver. They are used for strength and where appearance is not very important.

When using screws to join timber it is important to bore a clearance hole through the piece that the head will sit on. In softwoods it is sufficient to do just this, but with hardwoods it is necessary to drill a pilot hole into the piece being joined. If brass screws are going to be used you should screw a steel screw into place first, remove it and then insert the brass screw. This needs to be done because the brass screw may snap if the pilot hole or clearance hole is too small.

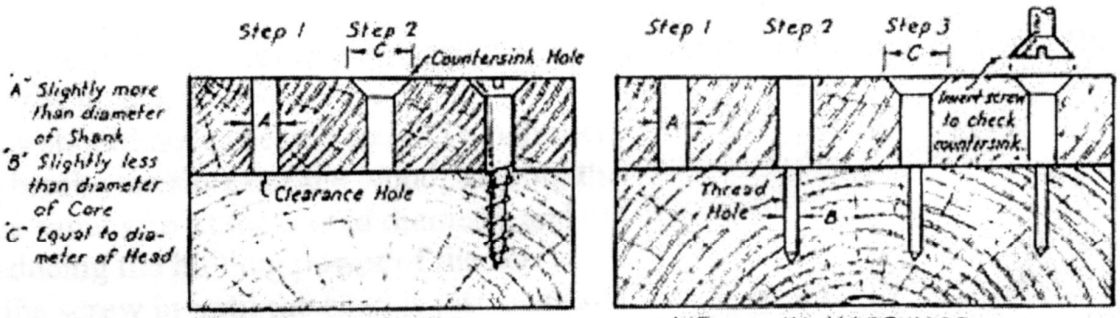

146. IN SOFTWOOD 147. IN HARDWOOD
(Countersunk for Countersunk Screw Heads)

BORING FOR SCREWS

NOTE: When using brass or copper screws drive in a steel screw of same size first.

Driving the screws into the timber involves using a screwdriver that is the correct size. It should fit snugly into the slot and not be any wider than the head of the screw. Always make sure that the slot in the head of the screw is running parallel to the direction of the grain of the timber. This is called heading the screws.

Do not over tighten it so much that it breaks the fibres of the timber. This will reduce the holding power of the screw in the same way that using a hammer to drive the screws in would do.

Screws should be used over nails when:

- Greater holding power is required
- Metal fittings are being attached to timber
- The work may have to be taken apart
- Vibration may weaken the holding power of the nails

Nails

Nailing timber is a very simple joining method. It may be done on its own or with the aid of an adhesive to make a stronger joint. Nailing will usually be done where appearance is not important. A variety of nails are shown below.

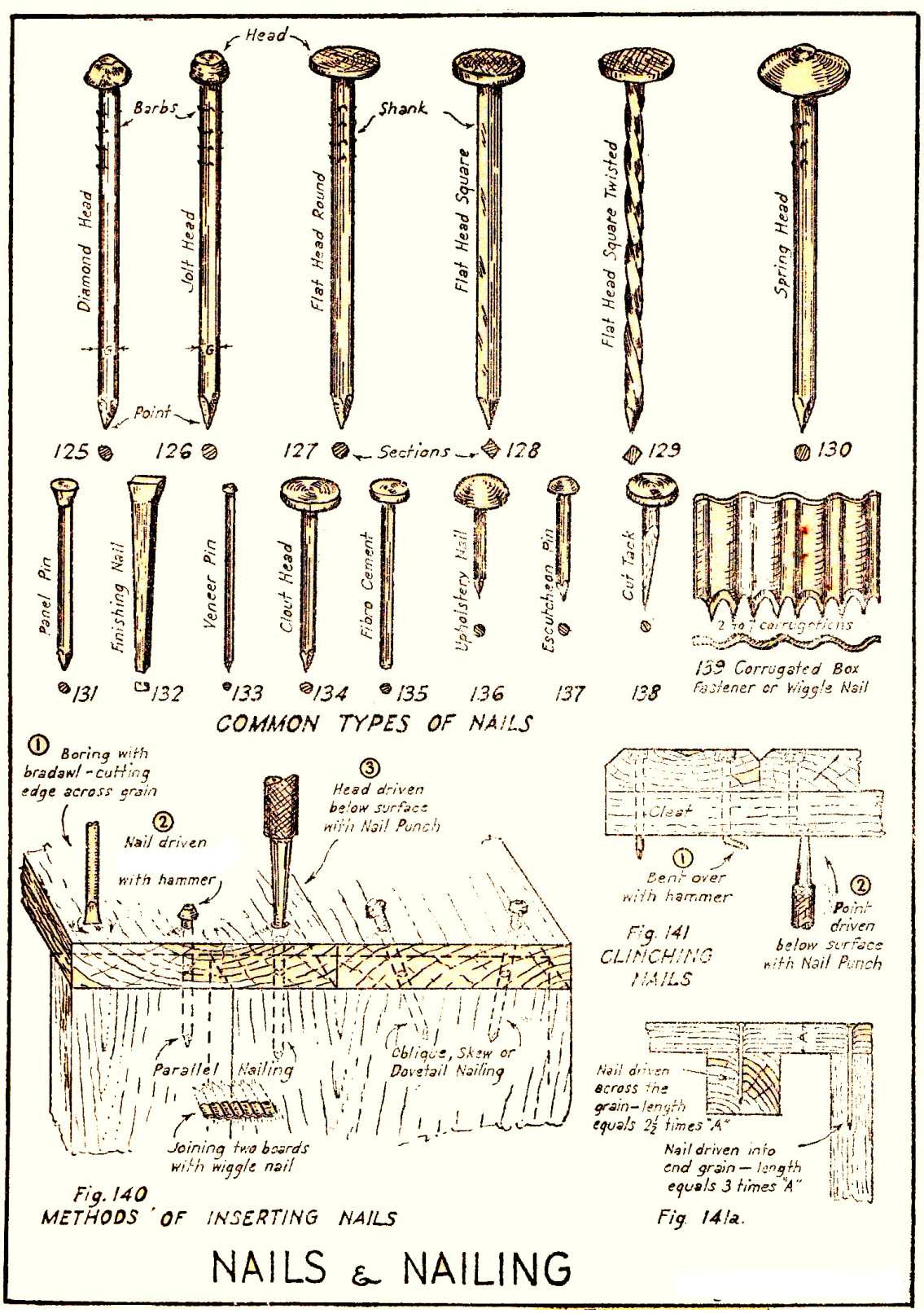

Nuts

Nuts are used in together with bolts to create a mechanical join. They can be used to join dissimilar materials, and in applications where pieces might need to be pulled apart and reassembled. A number of different types of nuts are available to suit various applications.

	Hexagon Nut		Cage Nut
	Flange Nut		Hexagon Weld Nut
	Nylon Insert Self Lock Nut		Square Nut
	Wing Nut		U Nut
	Kep Nut		T – Nuts For Channels
	Push Nut		Pal Nut
	Castle Nut		Cap Nut
	Coupling Nut		Jam Nut

Bolts

Bolts are generally used with nuts.

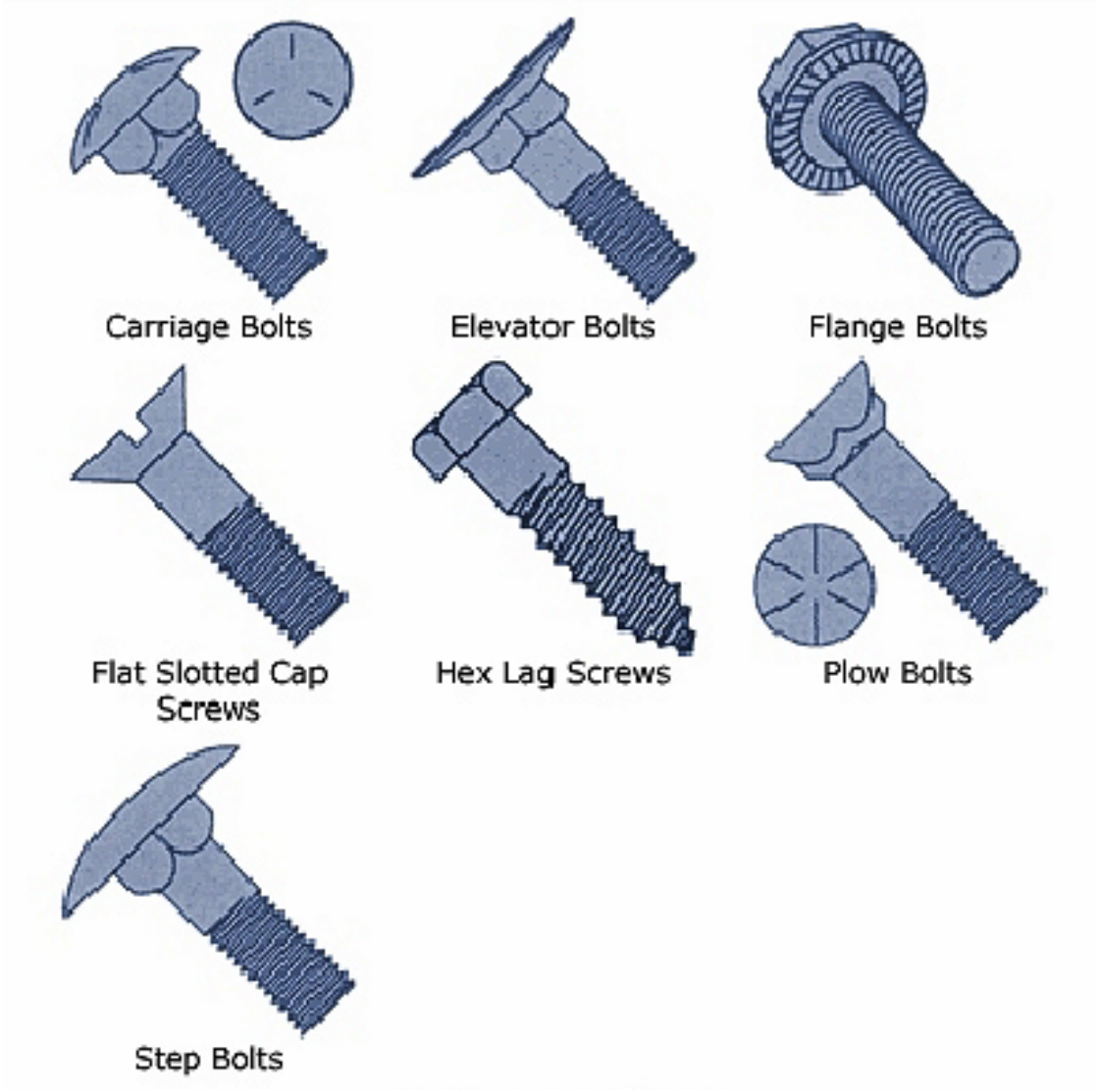

Knockdown Fittings

There are a huge variety of knockdown fittings available to suit almost any situation. They are generally used with what's called 'flat pack' furniture. This is the style of furniture you might buy from retail outlets like Ikea or Freedom. The furniture comes packed in several boxes and you assemble it yourself at home using simple tools like screwdrivers and Allen keys.

Knockdown fittings can be used in conjunction with more traditional woodworking construction methods. Check out www.hafele.com to see a wider range of knockdown fittings than those shown below.

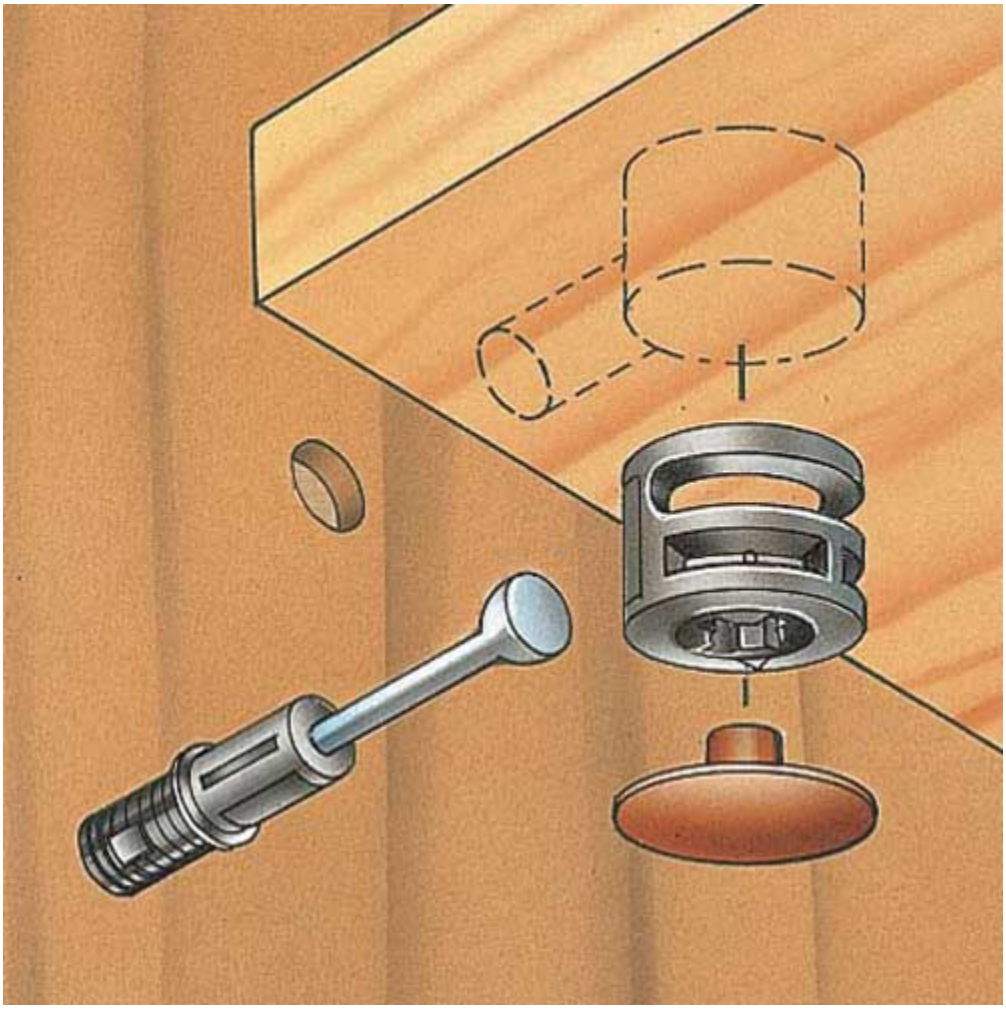

Cam lock fasteners are generally used to join vertical pieces to horizontal pieces.

Cross dowels are also used to join vertical pieces to horizontal pieces.

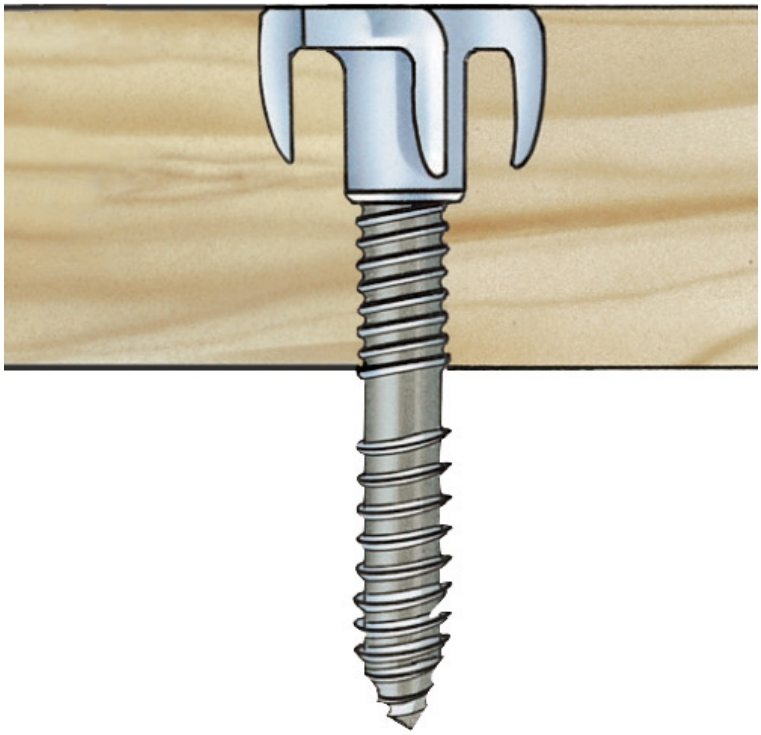

Tee nuts are good when you need to have adjustable fittings, such as the feet on cabinets. They can be used to help level a cabinet out on uneven surfaces. The Tee nut is inserted into a hole drilled into the job. The four prongs help locate the nut and hold it in place. The centre body of the tee nut has a female thread that other pieces can be inserted into.

Hinges

There are a huge variety of hinge types available to suit every situation. Some are designed purely for function; others are given some aesthetic considerations when designed.

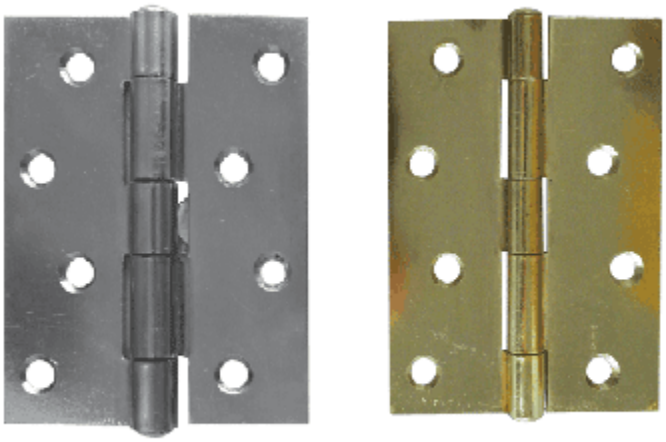

Butt hinges are probably the most common type of hinge and variations of this basic design are available. Commonly used on jewellery type boxes and cabinet doors.

The Euro hinge or Cup hinge is commonly used on cabinet doors. You will find them in most kitchens. They are quick and easy to install and offer some degree of fine tuning to get a perfect fit and good functioning door.

The Barrel or Concealed hinge is generally used for lightweight applications such as jewellery boxes. The scissor arm action does not like twisting loads so the holes they fit into need to be carefully aligned when installing.

Handles

Handles are generally longer than knobs and often secured with two or more screws.

Knobs
Knobs are generally some sort of rounded, bulbous shape and are usually secured with a single screw.

Staples/staple guns
Staples and staple guns are a quick way to secure a piece where the joining method is not going to be seen or require a significant degree of strength. This may be securing the thin plywood back to a cabinet.

They are also used effectively when upholstering parts, holding fabric, leather or synthetic materials in place over foam padding to make cushions, leather writing surfaces or webbing.

Staple guns can be mechanical like the one to the left or pneumatic (air driven) like the one on the following page.

The staples used are much heavier duty than those used in an office stapler. The legs vary in length depending on the application. The crown width can be varied depending on the staple gun and the gauge of the wire is much thicker than a standard 26/6 office staple.

Drawer runners

Drawer Runners can be fabricated in the workshop using timber. This includes extension runners.

The most common type available is the white, plastic bearing runners.

Better quality ball bearing runners, like those used in filing cabinets support greater loads and operate very smoothly.

Table clips

These are a metal version of the traditional timber button. They allow a table top and frame to move independently of each other without causing any damage.

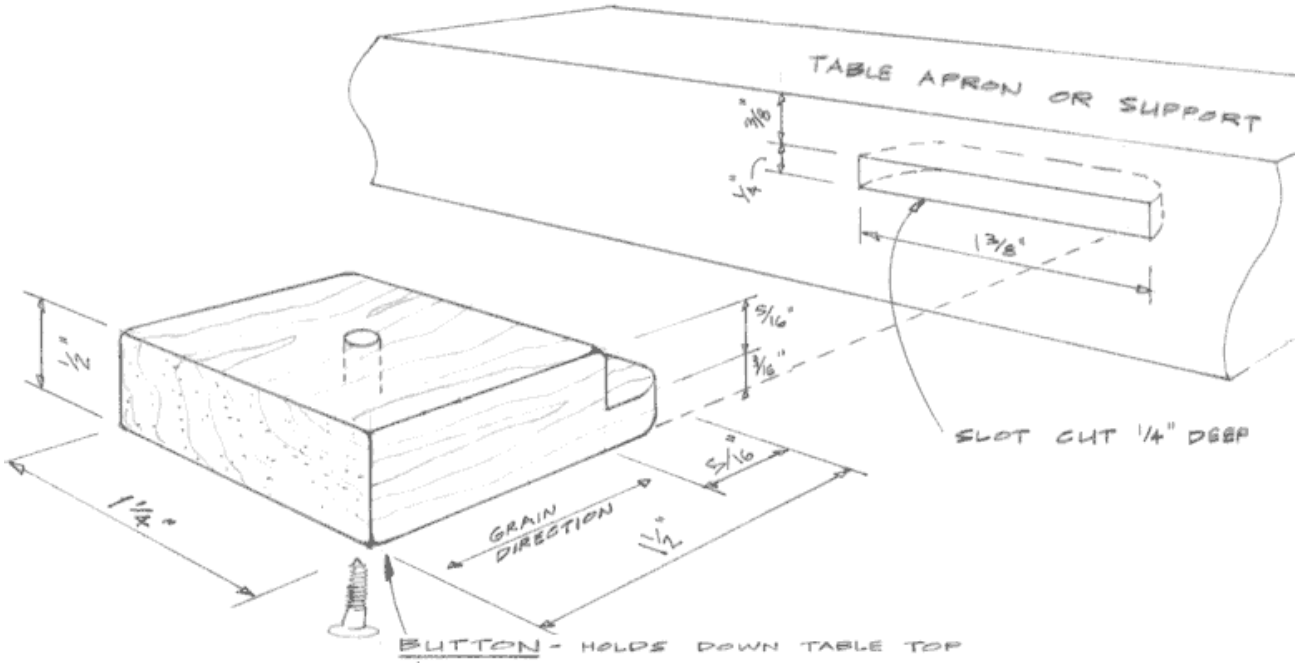

Latches

Latches help to hold things closed and generally have a piece that hooks into a hole.

Catches

Catches tend to be different to latches in that they grab onto another part instead of going into each other. They can be magnetic, use ball mechanisms or other means of having a moving piece attach to a fixed piece.

Shelf hangers

There are various methods of hanging shelves in a cabinet or from a wall. Some of the brackets and hangers are shown below.

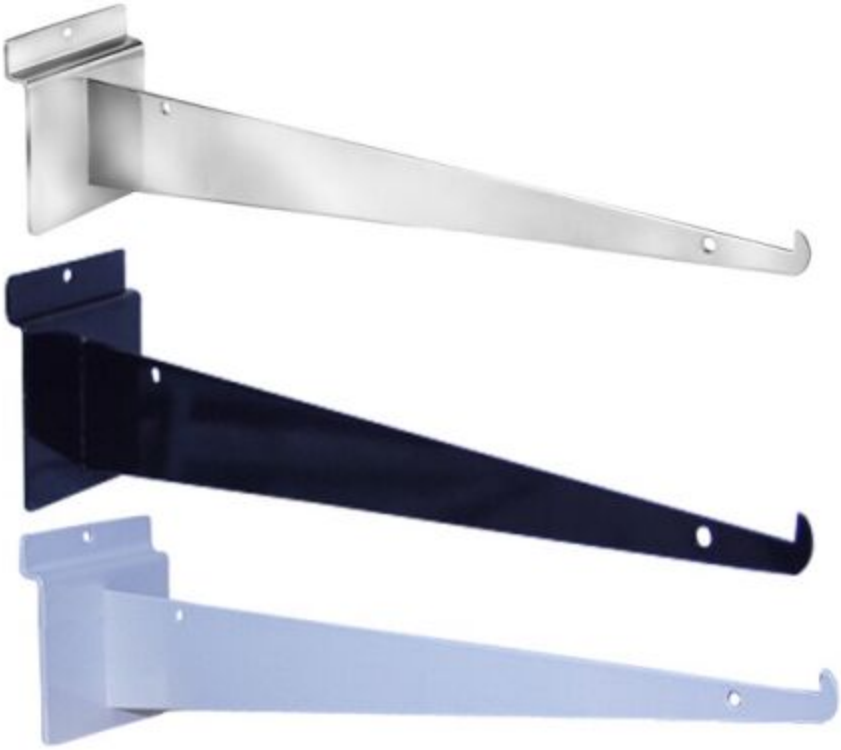

Review Questions – Furniture Hardware

1. Describe the process for using screws to join:

Particleboard:……
……..
……..…
…….….

MDF:……
…..……
….……
…..……

Plywood:……
……..……
……..……
……..……

2. Using a diagram, label the parts of a screw.

3. What size should the pilot hole be when screwing into hardwood?

……..…
…….….

4. What equipment can be used to drive screws into timber?

……..…
…….….

5. Describe the processes required to prepare the two pieces of manufactured board that are to be joined using a cam-lock fastener.

……
……
……
……
……
……

6. Describe the processes required to fit butt hinges.

……
……
……
……
……
……

7. Describe the processes required to fit a euro hinge.

……
……
……
……
……
……

8. What is the main difference between a handle and a knob?

……
……

9. Describe the process of fitting the common white, plastic bearing drawer runner to the drawer and cabinet.

……
……
……
……
……
……

10. Explain why table clips and buttons are used to attach table tops to frames.

……

……

……

11. Shelf supports are to be used in the construction of a cabinet to allow for adjustable positioning of a shelf. The shelf is to be adjustable in 30mm increments and have 10 positions. The shelf supports to be used are shown. Draw a simple jig that can be made up to drill the 10 holes required for each shelf support.