Processes – Preparation of Timber

Not all timber is bought Dressed All Round (DAR), so you need to understand how to change rough sawn timber to DAR. Rough sawn timber is generally cheaper than DAR timber because it has not been through the milling process.

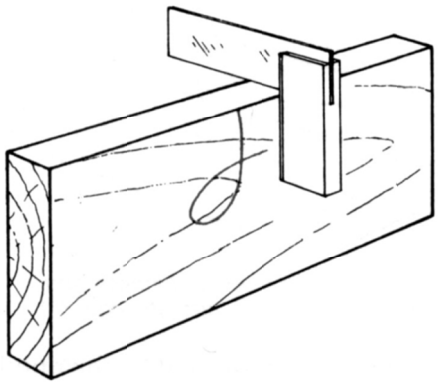

The first steps are to get a face side and a face edge. This will produce timber that is Dressed One Side One Edge (D1S1E). The best way to do this is to run the face side over a jointer and then do the same to the face edge.

If a jointer cannot be used then the face side will need to be planed flat. This first step is extremely important to how the board will finish up so great care must be taken to make sure that it is consistently flat and level across its whole area. The face side should be marked with a loop where one end joins what will become the face edge and the other end points in the direction the grain runs.

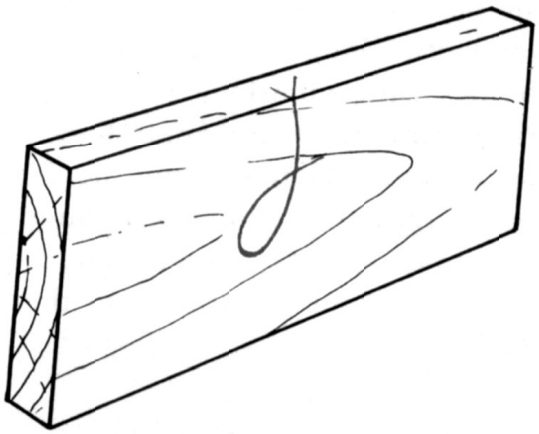

When the face has been planed flat do the same to the face edge. Again take the same care as with the face side and make sure that it is square to the face side along the whole length of the piece. The face edge is marked with a 'V' that joins the face side mark.

When the face side and face edge have been satisfactorily achieved the remaining side and edge can be dressed. This is very easy to do. Running the timber through the thicknesser with the dressed side facing down can do the next side. If the board is thick enough then the second edge can be done through the thicknesser using the same process as for the second side. If the edge is not thick enough then it can be cut on the table saw.