Information & Communication Technologies

Word Processing

Word processing is an essential part of project folio development and presentation. Using a word processing program such as MS Word allows you to enter information quickly; insert images, spreadsheets, and links; send it to your teacher to check, and make changes quickly and easily. It can also be used as a presentation tool in place of other, dedicated desktop publishing software.

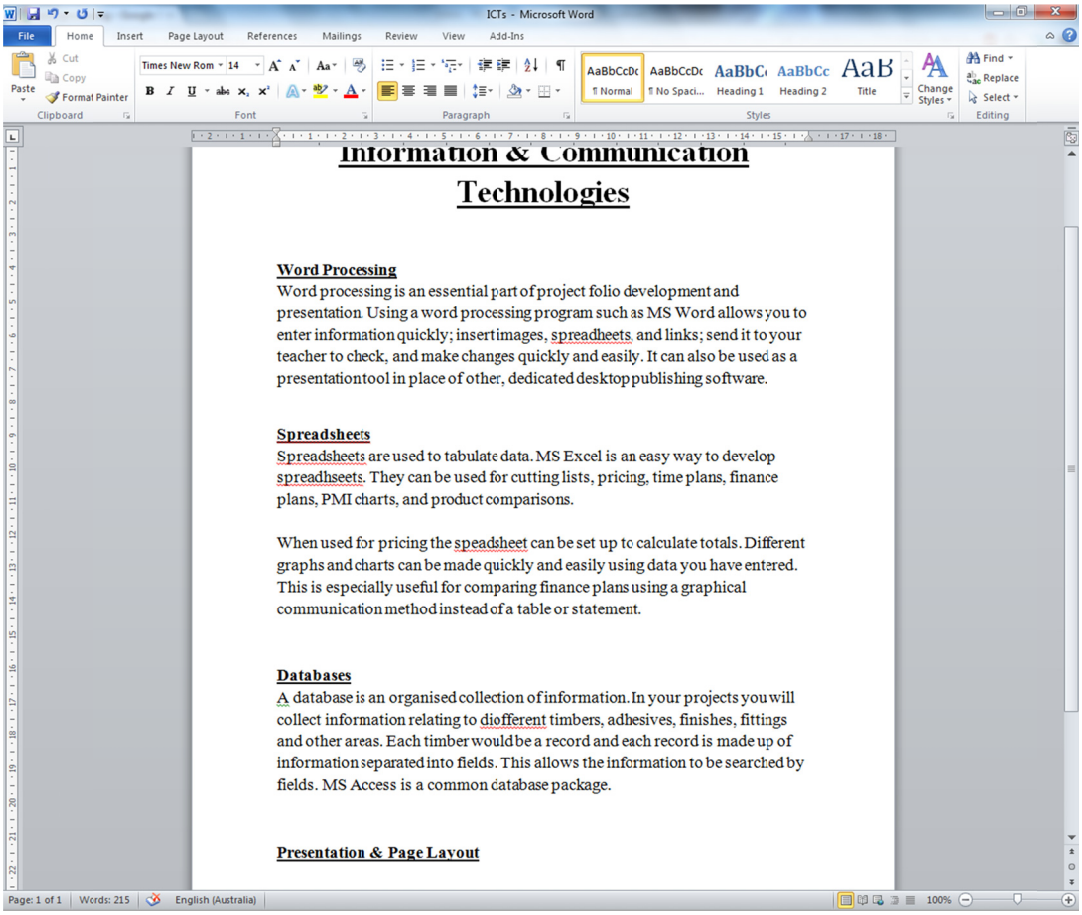

Spreadsheets

Spreadsheets are used to tabulate data. MS Excel is an easy way to develop spreadhseets. They can be used for cutting lists, pricing, time plans, finance plans, PMI charts, and product comparisons.

When used for pricing the spreadsheet can be set up to calculate totals. Different graphs and charts can be made quickly and easily using data you have entered. This is especially useful for comparing finance plans using a graphical communication method instead of a table or statement.

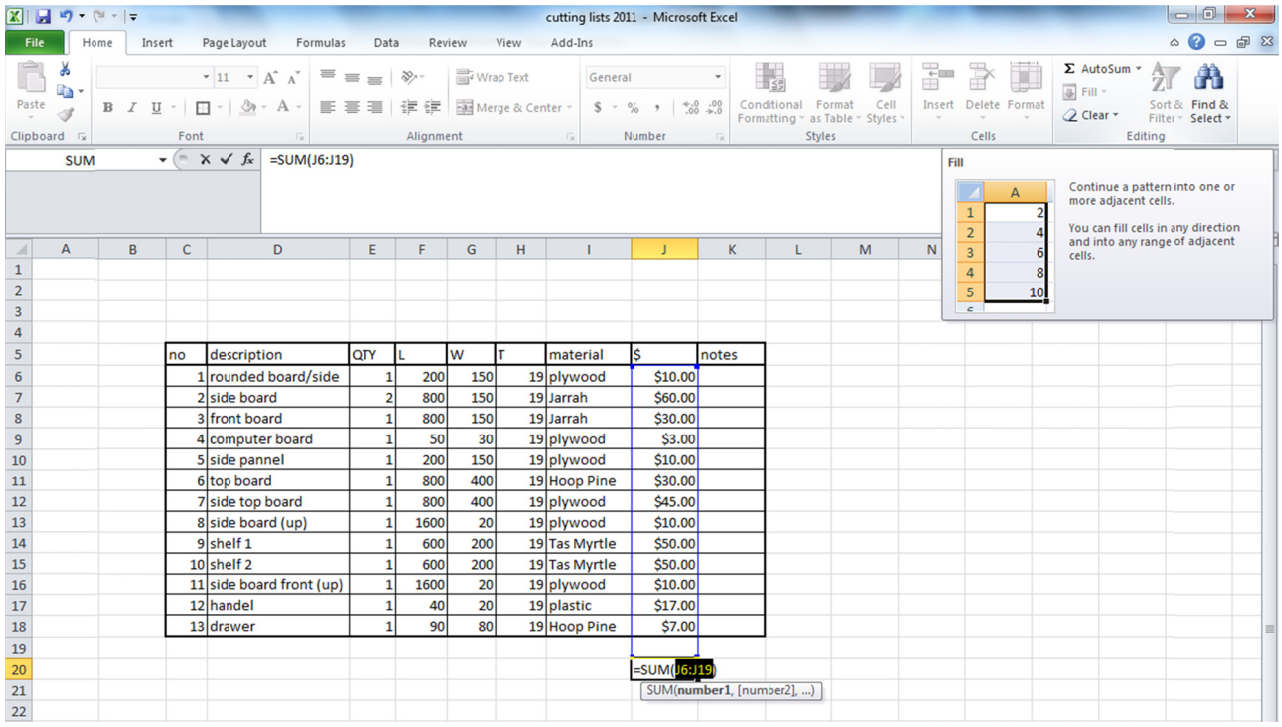

no	description	QTY	L	W	T	material	$	notes
1	rounded board/side	1	200	150	19	plywood	$10.00	
2	side board	2	800	150	19	Jarrah	$60.00	
3	front board	1	800	150	19	Jarrah	$30.00	
4	computer board	1	50	30	19	plywood	$3.00	
5	side pannel	1	200	150	19	plywood	$10.00	
6	top board	1	800	400	19	Hoop Pine	$30.00	
7	side top board	1	800	400	19	plywood	$45.00	
8	side board (up)	1	1600	20	19	plywood	$10.00	
9	shelf 1	1	600	200	19	Tas Myrtle	$50.00	
10	shelf 2	1	600	200	19	Tas Myrtle	$50.00	
11	side board front (up)	1	1600	20	19	plywood	$10.00	
12	handel	1	40	20	19	plastic	$17.00	
13	drawer	1	90	80	19	Hoop Pine	$7.00	

Here the spreadsheet has been used to set up a cutting list, including the price for each piece. The Autosum features is then used to calculate the total cost.

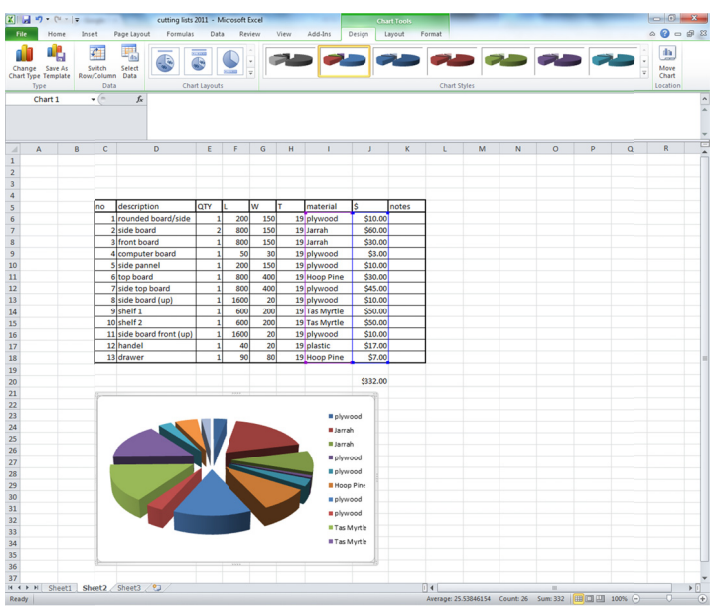

The spreadsheet can also be used to create charts and tables as shown to the left. The pie chart has been created by selecting the 'Material' and '$' columns and inserting a chart.

Databases

A database is an organised collection of information. In your projects you will collect information relating to different timbers, adhesives, finishes, fittings and other areas. Each timber would be a record and each record is made up of information separated into fields. This allows the information to be searched by fields. MS Access is a common database package.

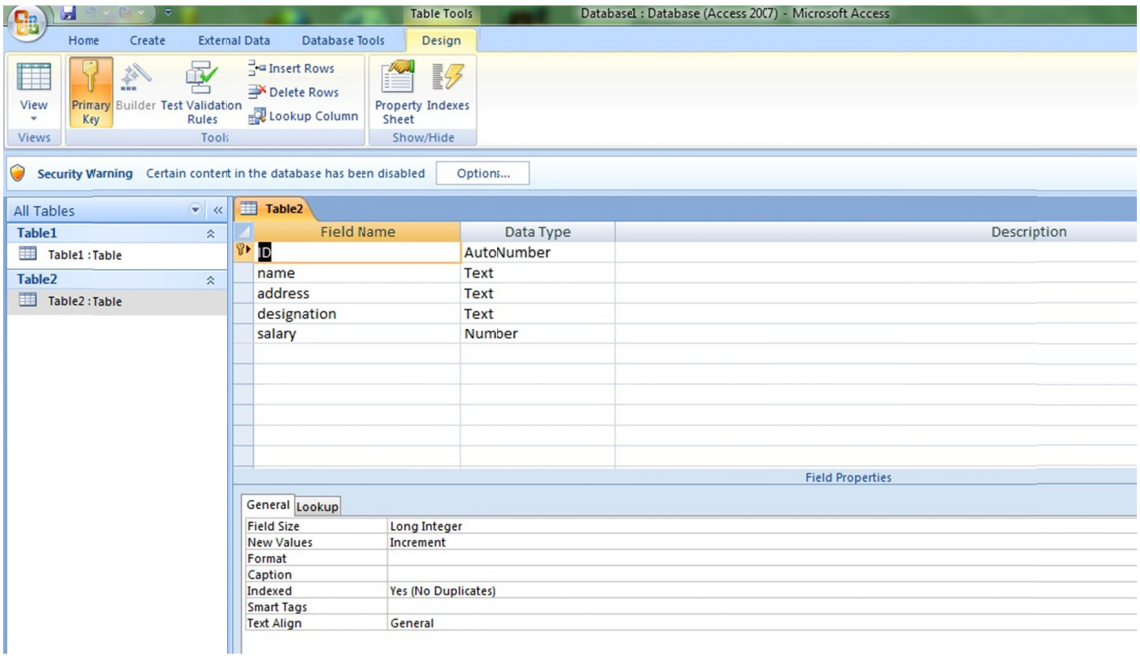

Presentation & Page Layout

There are software packages specifically developed for organising the presentation and page layout of project folios. This software is sometimes called Desktop Publishing software. MS Word is also suitable for this purpose, but MS Publisher can be used to arrange images, text and other objects in different ways that are difficult or restricted in MS Word.

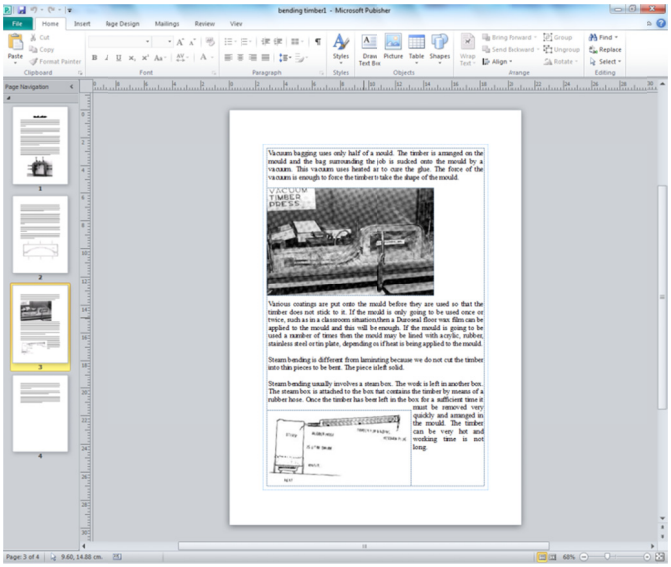

Computer Aided Design (CAD)

Most CAD packages can produce 2D orthographic drawings and 3D pictorial drawings. A significant number of CAD packages draw products in 3D and the convert them to 2D drawings. CAD programs can also be used to model, test and render objects, making the presentation of projects extremely fast, detailed and accurate. Projects can be animated to demonstrate how doors and drawers work. They can be inserted into different backgrounds and have different lighting effects used to change light and shadow on the product.

The drawings created with the CAD package can be printed from the software itself or pasted into a document using the 'print screen' function.

Popular CAD packages include Google SketchUp and PTC CREO.

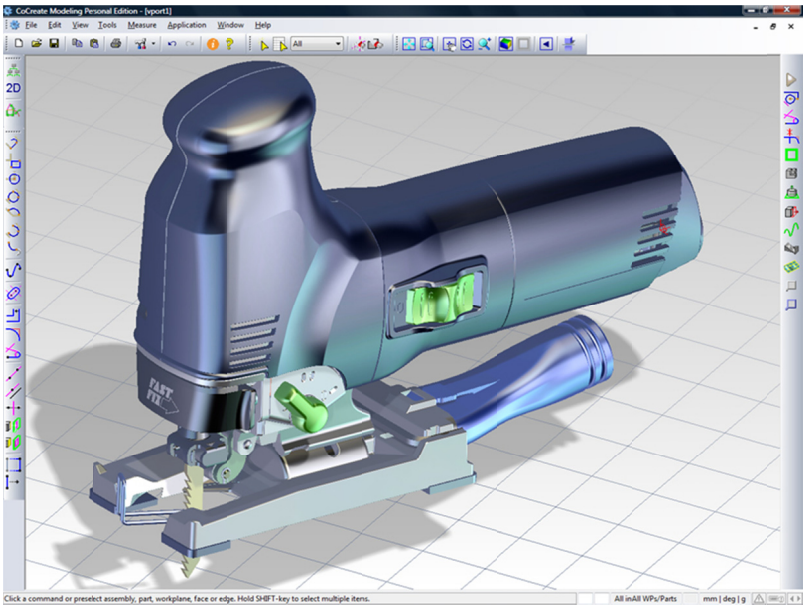

PTC CREO

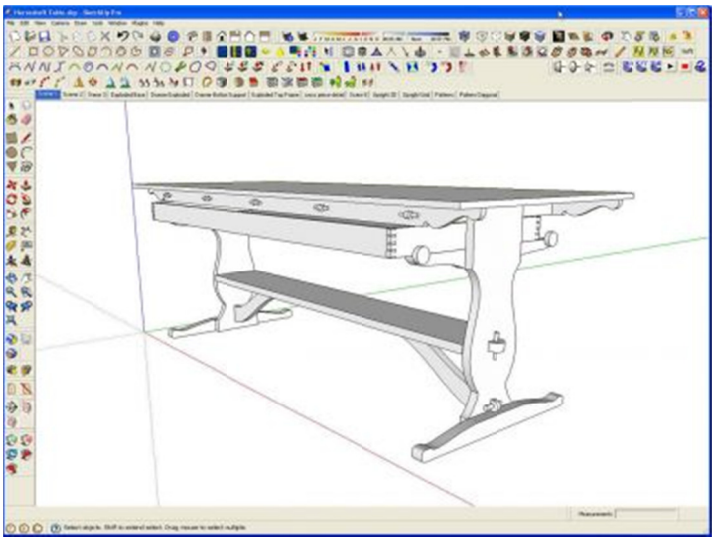

Google SketchUp